FRUNZE

58 Gorkogo Str., Sumy, 40004, Ukraine
tel.: +38 0542 77 77 94, 68 69 15, 77 50 00
sales@frunze.com.ua
frunze.com.ua

Representation office in Kiev:
tel./fax: +38 044 280 98 19, 280 98 28
frunze-kiev@ukr.net

frunze.com.ua

INDUSTRIAL PUMPS & LIQUID RING VACUUM MACHINES

"SMNPO - Engineering" JSC

Technical catalogue

INDUSTRIAL PUMPS & LIQUID RING VACUUM MACHINES

ISO 9001
BUREAU VERITAS
Certification

1 JSC “SMNPO - Engineering”

JSC “SMNPO - Engineering”, founded in 1896, is now one of the largest machine-building enterprises in Europe manufacturing equipment for oil, gas and chemical industries.

Unique types of chemical facilities, centrifuges, compressors and turbo-compressor units, pumps and valves for gas pipelines, oil-refining equipment and gas-filling stations, drill collars and complex gas preparation plants – this is far from being a complete list of products manufactured at the company.

Products diversity owes to company’s well-developed technical and process basis available. Company includes specialized plants equipped with the most advanced equipment and modern control facilities. Company has a testing facility which complies with the most strictest requirements to performance of acceptance testing of products manufactured.

High quality of products is ensured by the quality system valid in the Company. The quality system fully corresponds to the international standard ISO 9001, which is confirmed by the Certificate of Approval, granted by the international certification body Bureau Veritas Quality International. The whole range of equipment, manufactured by the Company, meets the requirements of national and international standards.

JSC “SMNPO - Engineering” is the largest manufacturer of pumping equipment in Ukraine and CIS countries. Manufactured pumping equipment is rather diversified and finds wide application almost in all branches of industry.

Company's history in production of pumps has more than 115 years experience. The first water pumps were manufactured in 1902. There were pumps for sugar plants. In 30th the company mastered the production of liquid-packed ring-type pumps and at the end of 40th — vacuum rotary vane-type pumps. 60th years is the beginning of manufacturing of special chemical pumps made of titanium. In 80th it was actively continuing the mastering of new types of pumping equipment for oil, chemical and other branches of industry.

For stimulation of oil production by method of water flooding of oil beds under high pressure since 1980 JSC “SMNPO - Engineering” started to produce multi stage centrifugal pumps of U.HC (CNS) type. Presently more than 10 000 of such pumps are under operation in oil industry. These pump units have been supplied not only to CIS countries but also to Iran, Syria, Argentina, Pakistan and other countries. They are in great demand among oil-industry specialists, especially in Western Siberia. For 40-year period of production of U.HC (CNS) pumps designers considerably improved these pumps, mastered new types of this equipment.

The development of industry in 90th determined the mastering of new types of pumping equipment.

We enlarge the range of vacuum liquid-packed ring-type and rotary vane-type pumps, centrifugal pumps for chemical, coal, metallurgical, paper making and other branches of industry and develop new types of pumping equipment.

JSC “SMNPO - Engineering” becomes the main supplier of special pumping equipment for nuclear power plants.

The range of production includes reactor coolant pump with power 8 000 kW and head 20 000 m^3 of coolant per hour for I circuit of power generating unit and 14 types of pumps of the II circuit (feed water, condensate, circulating pumps). Manufacturing of pumps is carried out in specialized workshops in full compliance with the requirements of Safety regulations for nuclear power energy and subject to strict technical inspection and tests. Total service life of this equipment is not less than 30 years.

Running nuclear power plants in Russia, Ukraine, Armenia, Lithuania, Bulgaria, Finland, Czech Republic, Hungary, Slovakia and China are completed with pump equipment manufactured by Sumy machine-builders.

Content

Centrifugal Pumps and Pumping Units **3**
Cradle-mounted Chemical Pumps 3
KhME type
Kh type
KhE type
Semi Submerged Chemical Pumps 12
KhPV type
KhPE type
Centrifugal Cradle-mounted Pumps 18
CN type
Centrifugal Cradle-mounted Pumps for Liquids with Foreign Impurities 21
CPN type
Vertical Centrifugal Sludge Pumps 25
CVP type
NShB type
Centrifugal Multistage Pumps 28
CNS 120 type
CNS 180 type
CNS 240 type
Lube System
Automation Equipment System
Centrifugal Multistage Mine Pumps 37
CNS 40
CNS 80
CNS 200
NSSh 410
NSSh 500
Data Sheet 48

Liquid Ring Vacuum Machines **50**
Liquid Ring Vacuum Pumps 50
VVN type
DVVN type
Liquid Ring Compressors 59
VK type
VVK type
Data Sheet 68

Rotary Vane-type Vacuum Pumps **69**
RVN type 69
Data Sheet 71

Certificates and Approvals **72**

KhME Cradle-mounted Chemical Pumps

Electric pumping unit (pump) is designed for pumping of oil products (petrol, diesel fuel), flammable and highly inflammable liquids with the temperature to 347K (70°C).

Pumping unit is operated at areas with temperate, cold, temperate-and-cold climate (temperature range -60°C - +45°C), category of location 2,4 according to GOST 15150-60.

Pumping unit is manufactured in versions which differ in material and seal type.

Dimensional drawing of electric pumping unit KhME 25-20-140-D-5

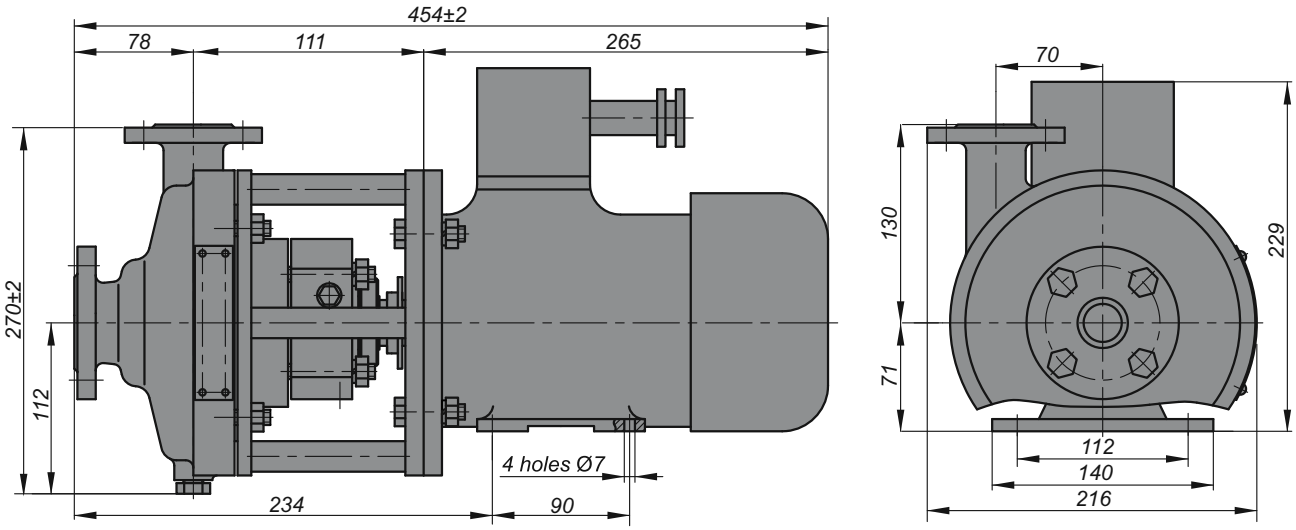

Technical Data

Capacity, m^3/s (m^3/hour)	$5.6x10^{-4}$ (2)
Head, m	25
Rotational speed (synchr.), s^{-1} (rpm)	50 (3000)
NPSH, m, no more than	3
Inlet pressure maximum MPa (kgf/cm^2)	0.2 (2)
Power at ρ=1000 kg/m^3, kW,	pump / pumping unit
	0.6 / 0.75
Pump efficiency, %, no more than	26 / 21
Solid impurities maximum size, mm	0.1

The example of pump and pumping unit designation

"Electric pumping unit KhME 25-20-140-D-5"

"Pump KhME 25-20-140-D-5",

where KhM - modular pump;

KhME - modular pump in explosive design;

25 - inlet diameter, mm;

140 - impeller diameter, mm;

D - material of inner flowing part:

D - steel 20Х13Л;

K - steel 12Х18Н10Т;

5 - type of rotor end seal - single end with additional emergency.

Performances and curves of electric pumping unit KhME 25-20-140-D-5 (n=3000 rpm)

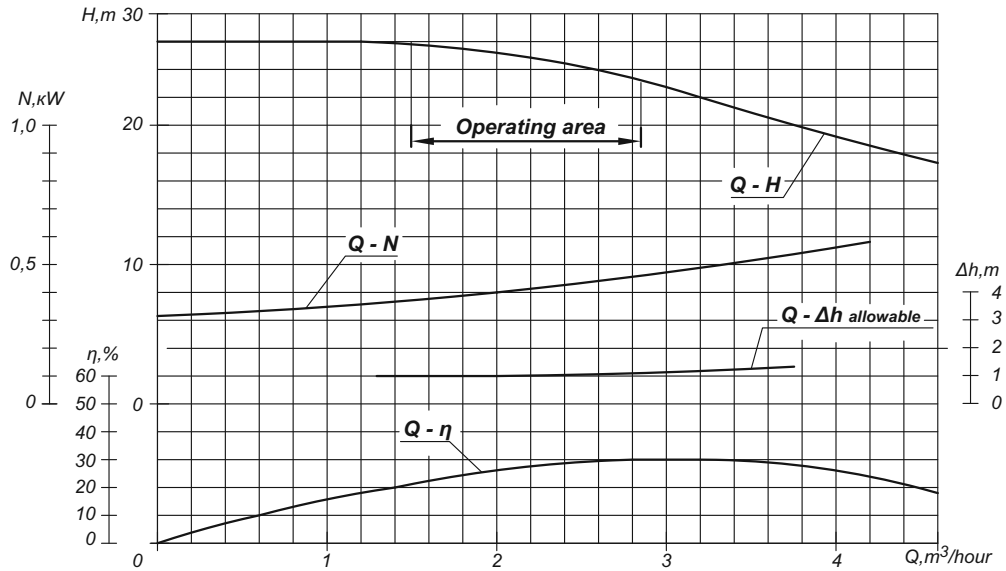

FRUNZE

Kh and KhE Cradle-mounted Chemical Pumps

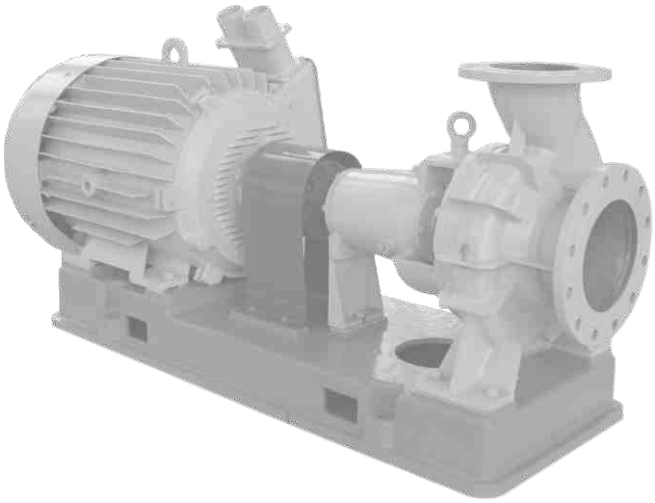

Pumps of “Kh” and “KhE” types with the capacity from 6.3 m³/hour to 400 m³/hour and pumping units on their basis are designed for supply of oil, oil light products, chemically active and slightly aggressive liquids which may cause corrosion of pump inner flowing part material not more than 0.1 mm/year, and neutral liquids.

The pumps and pumping units are manufactured for the areas with temperate and cold climate (temperature range -60°C - +45°C), category of location 2, 4 according to GOST 15150-60.

Pumps and pumping units are used for operation at explosion zones V-1a, V-1г as per Regulations for the design and construction of electrical installations. They are designed for pumping of liquids the vapors of which can form explosive mixtures of II category, groups T2 and T3 as per GOST 12.1.011-78 belonging to hazard categories III and IV according to GOST 12.1.005-88.

The example of pump and pumping unit designation

“Pump KhE 100-65-200-100/50-D-5 TU U3.19-05747991-096-99”

“Electric pumping unit
KhE 100-65-200-100/50-D-5 TU U3.19-05747991-096-99”

The same with first modernization
“Electric pumping unit
1KhE 100-65-200-100/50-D-5 TU U3.19-05747991-096-99”

where KhE - Kh - horizontal, cradle-mounted, single stage pump with axial inlet and radial outlet, with support placed on casing. The pumps are designed for supply of chemically active, neutral and slightly aggressive liquids;
AKh -the same with open impeller;
KhE -the same designed for supply of flammable and highly inflammable liquids.

Pumps are manufactured in versions which differ in material and seal type:

D - material of inner flowing part:
- A - carbon steel;
- D - steel 20Х13Л;
- T - titanium alloy BT 1-0;
- K - steel 12Х18Н10Т;

5 - the type of rotor end seal:
- 5 - single end seal;
- 55 - doubled end seal;
- S - gland seal;
- SD - doubled gland seal (with c hydraulic seal).

The Company improves the pumping equipment and equips pumping units with the motors of different manufactures. Thereby when ordering, please specify overall and mounting dimensions and required parameters according to the recommended form of Data Sheet.

Technical data of Kh type chemical pumps

Designation	Rotational speed (synchr.), rpm	Capacity, m^3/hour	Head, m	NPSH, m not more	Efficiency, % no less		Power, kW		Motor		
					pump	unit	pump	unit	N, kW	n, rpm	voltage, V
Kh 50-32-125D,K	1500	6.3	5	3.2	52	50	0.2	0.22	0.25	1500	380
	3000	12.5	20	3.5	53	50	1.5	1.7	2.2	3000	380
Kh 50-32-160D,K	1500	6.3	8	3.4	45	42	0.3	0.33	0.37	1500	380
Kh 50-32-200D,K	1500	6.3	12.5	3.4	37	35	0.25	0.28	0.37	1500	380
	3000	12.5	50	3.5	40	38	2	2.2	5.5	3000	380
Kh 65-40-200D,K	1500	12.5	12.5	3.6	56	53	1.1	1.22	1.5	1500	380
	3000	25	50	3.8	57	54	8.5	9.4	15	3000	380
AKh 65-40-200K	3000	25	50	3.8	46	45	7	7.1	11	3000	380
Kh 65-40-250K	1500	12.5	20	3.4	34	30	1.8	2	2.2	1500	380
	3000	25	80	3.8	36	34	14.3	15.7	15	3000	380
Kh 65-40-315K	1500	12.5	32	3.8	30	28	3	3.3	5.5	1500	380
AKh 65-40-315K	3000	25	125	3.2	31	30	28	29	30	3000	380
Kh 65-50-160D,K	1500	12.5	8	3.4	55	52	0.5	0.55	0.75	1500	380
	3000	25	32	3.8	60	56	4	4.4	5.5	3000	380
Kh 80-65-160D,K	1500	25	8	3.8	65	61	1	1.1	1.5	1500	380
	3000	50	32	4	67	63	7.8	8.7	11	3000	380
Kh 80-50-200D,K	1500	25	12.5	3.4	62	59	1.35	1.4	1.5	1500	380
	3000	50	50	3.8	63	60	10	10.8	15	3000	380
Kh 80-50-250D,K	1500	25	20	4.8	57	53	2.3	2.5	5.5	1500	380
	3000	50	80	5	58	54	18.4	20.5	22	3000	380
Kh 80-50-315K	1500	25	32	4.8	45	42	4.8	5.3	11	1500	380
	3000	50	125	5	45	42	38.4	48.7	45	3000	380
Kh 100-65-160D,K	1500	50	8	3.8	72	58	1.5	1.7	2.2	1500	380
	3000	100	32	4	74	70	11.8	13	15	3000	380
Kh 100-65-200D,K	1500	50	12.5	4.4	70	61	2.4	2.7	3	1500	380
	3000	100	50	4.5	71	62	19.5	22	45	3000	380
Kh 100-65-250D,K	1500	50	20	5	66	62	4.1	4.5	11	1500	380
	3000	100	80	6	66	62	32.8	36.5	45	3000	380
Kh 100-65-315K	1500	50	32	6	58	54	7.5	8.3	11	1500	380
	3000	100	125	8	58	54	60	67	75	3000	380
Kh 125-80-200D	1500	80	12.5	5	72	63	3.6	4	5.5	1500	380
	3000	160	50	5.5	73	64	28.6	32.5	45	3000	380
Kh 125-100-400D	1500	125	50	3.5	64	61	24.8	27.5	37	1500	380
Kh 150-125-400D,K	1500	200	50	3.8	71	62	38.3	43.5	55	1500	380
Kh 200-150-315K	1500	315	32	3.6	82	80	33.5	36	55	1500	380
Kh 200-150-315A,T	1500	315	32	3.6	82	80	33.5	36	55	1500	380
Kh 200-150-400D	1500	400	50	4.2	70	61	80	86	90	1500	380
Kh 200-150-400A,T	1500	400	50	4.2	70	61	80	86	90	1500	380
Kh 250-200-315A,T	1500	500	32	5	80	78	54	60	90	1500	380

Technical data of KhE type chemical pumps

Designation	Rotational speed (synchr.), rpm	Capacity, m^3/hour	Head, m	NPSH, m not more	Efficiency, % no less		Power, kW		Motor		
					pump	unit	pump	unit	N, kW	n, rpm	voltage, V
KhE 50-32-125D	1500	6.3	5	3.2	52	50	0.2	0.22	0.25	1500	380
	3000	12.5	20	3.5	53	50	1.5	1.7	3	3000	380
KhE 50-32-200K	3000	12.5	50	3.5	40	38	2	2.2	4	3000	380
KhE 65-40-315D	3000	25	125	3.2	31	30	28	29	30	3000	380
KhE 65-50-160D	1500	12.5	8	3.4	55	52	0.5	0.5	0.75	1500	380
	3000	25	32	3.8	60	56	4	4.4	5.5	3000	380
KhE 80-50-200D	1500	25	12.5	3.4	62	59	1.35	1.4	1.5	1500	380
	3000	50	50	3.8	63	60	10	10.8	15	3000	380
KhE 80-50-315D	1500	25	12.5	3.4	62	59	1.35	1.4	1.5	1500	380
KhE 80-65-160K	1500	25	8	3.8	65	61	1	1.1	1.5	1500	380
	3000	50	32	4	67	63	7.8	8.7	11	3000	380
KhE 100-65-200D	1500	50	12.5	4.4	70	61	2.4	2.7	3	1500	380
	3000	100	50	4.5	71	62	19.5	22	45	3000	380
KhE 100-65-315D	1500	50	12.5	4.4	70	61	2.4	2.7	3	1500	380
	3000	100	50	4.5	71	62	19.5	22	45	3000	380
KhE 125-100-400K	1500	125	50	3.5	64	61	24.8	27.5	30	1500	380
KhE 200-150-400D	1500	400	50	4.2	70	61	80	86	90	1500	380

Overall and connection dimensions of Kh type electric pumping units

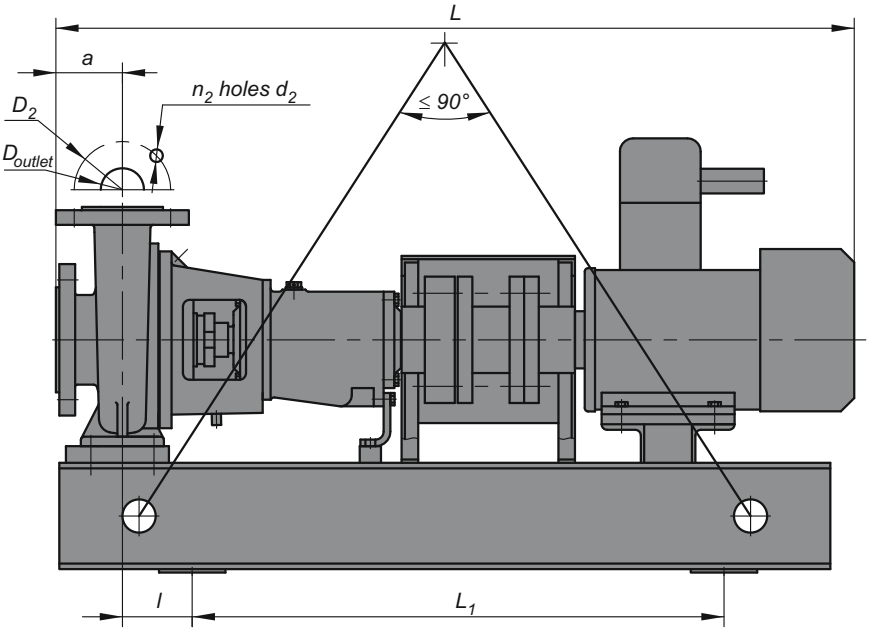

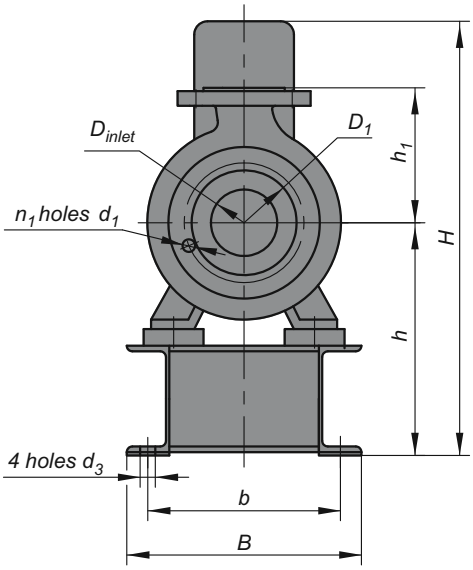

Designation	Rotational speed, rpm	Dimensions, mm																		Weight, kg	
		a	L_1	l	h	h_1	B	b	d_3	D_{inlet}	D_1	d_1	n_1	D_{outlet}	D_2	d_2	n_2	L	H	pump	unit
Kh 50-32-125D,K	1500	80	540	70	192	140	360	320	18	50	125	M16	4	32	100	18	4	885	315	50	123
	3000																				
Kh 50-32-160D,K	1500	80	500	110	212	160	380	330	24	50	125	M16	4	32	100	18	4	1005	390	56	152
	3000																				
Kh 50-32-200D,K	1500	80	500	110	240	180	380	330	24	50	125	M16	4	32	100	18	4	1005	420	88	189
	3000																				
Kh 65-40-200D,K	1500	100	740	130	260	180	490	440	24	65	145	M16	4	40	110	18	4	1205	460	90	293
	3000																				
Kh 65-40-250K	1500	100	800	105	350	225	324	260	23	65	145	19	8	40	110	19	4	1325	575	87	283
	3000																				
Kh 65-40-315K	1500	125	575	100	325	250	400	350	24	65	145	19	4	40	110	19	4	1210	575	98	267
	3000		832	137	355		500	450										1520	912	130	400
Kh 65-50-160D,K	1500	80	660	110	222	160	450	400	24	65	145	M16	4	50	125	18	4	1005	395	62	293
	3000																				
Kh 80-50-200D,K	1500	100	700	120	270	200	350	290	23	80	160	18	8	50	125	18	4	1220	470	95	280
	3000																				
Kh 80-50-250D,K	1500	125	800	95	360	225	350	290	23	80	160	19	8	50	125	19	4	1230	663	95	250
	3000																				
Kh 80-50-315K	1500	125	800	105	405	280	406	290	23	80	160	19	8	50	125	19	4	1345	685	112	315
	3000																				
Kh 80-65-160D,K	1500	100	740	130	260	180	490	440	24	80	160	M16	8	65	145	18	4	1140	440	66	293
	3000																				
Kh 100-65-160D,K	1500	100	800	105	350	200	350	290	23	100	180	19	8	65	145	19	4	1220	550	88	297
	3000																				
Kh 100-65-200D,K	1500	100	920	120	406	225	550	490	23	100	180	19	8	65	145	19	4	1550	765	89	580
	3000																				
Kh 100-65-250D,K	1500	125	800	105	380	250	370	290	23	100	180	19	8	65	145	19	4	1385	630	97	310
	3000																				
Kh 100-65-315K	1500	125	830	105	405	280	404	290	23	100	180	19	8	65	145	19	4	1415	685	120	333
	3000																				
Kh 125-80-200D	1500	125	920	120	406	250	550	490	23	125	210	19	8	80	160	19	8	1575	765	95	576
	3000																				
Kh 125-100-400D	1500	140	970	110	410	355	610	560	23	125	210	19	8	100	180	19	8	1690	800	212	690
																					715
Kh 150-125-400D,K	1500	140	1000	105	485	400	575	500	23	150	240	24	8	125	210	19	8	1650	885	204	713
Kh 200-150-315K	1500	160	940	175	315	400	650	570	30	200	295	23	12	150	240	23	8	1675	885	155	730
Kh 200-150-400D	1500	162	940	175	485	450	650	570	30	200	295	23	12	150	240	23	8	1750	935	180	840
AKh 65-40-200K	3000	100	740	130	260	180	490	440	24	65	145	M16	4	40	110	18	4	1205	460	90	293
AKh 65-40-315K	3000	125	832	137	355	250	380	330	24	65	415	19	4	40	110	19	4	1520	912	130	400

Overall and connection dimensions of KhE type electric pumping units

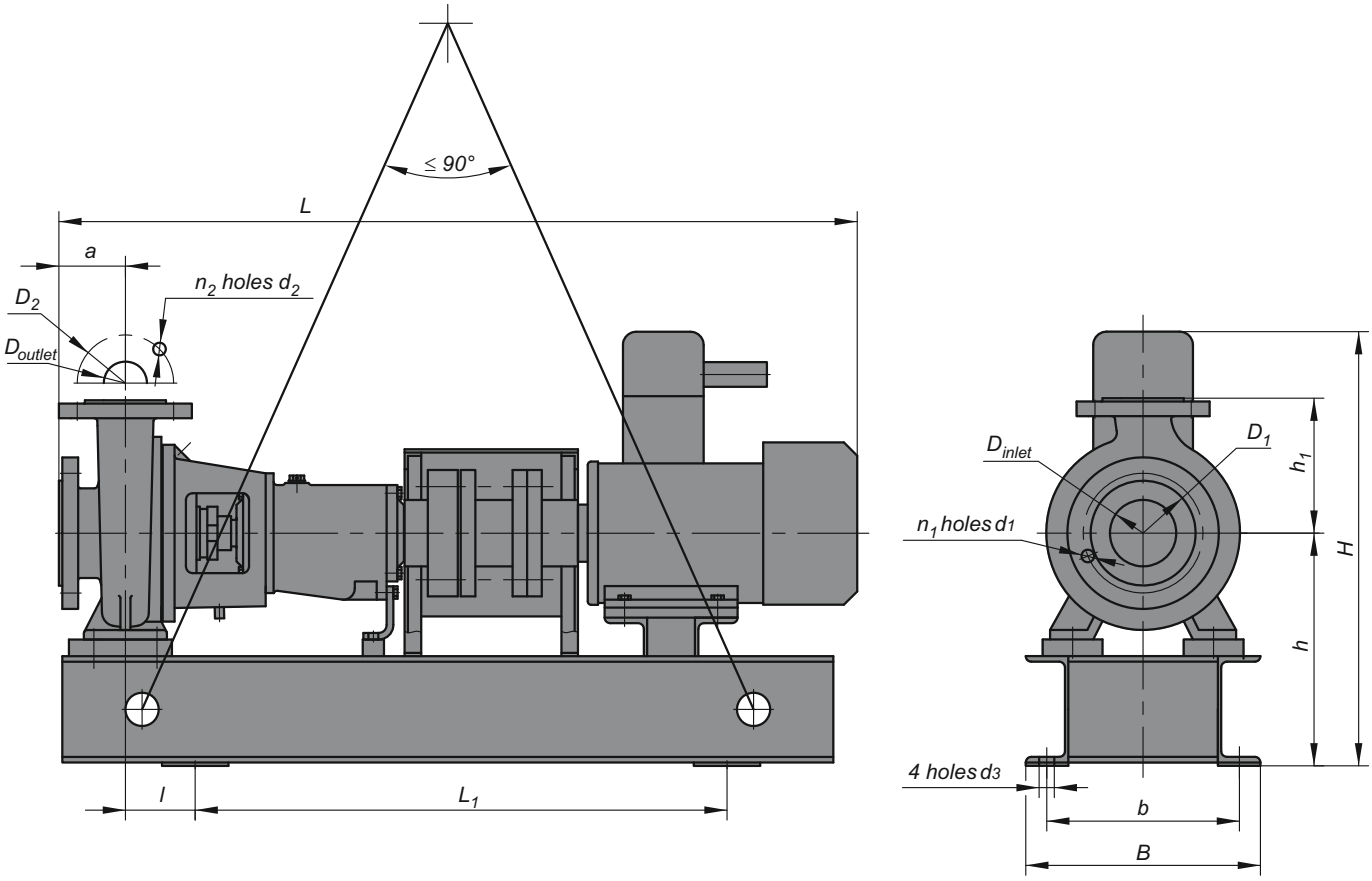

Designation	Rotational speed, rpm	Dimensions, mm																		Weight, kg	
		a	L_1	l	h	h_1	B	b	d_3	D_{inlet}	D_1	d_1	n_1	D_{outlet}	D_2	d_2	n_2	L	H	pump	unit
KhE 50-32-125D	1500 3000	80	540	70	192	140	360	320	18	50	125	M16	4	32	100	18	4	920	425	50	123
KhE 50-32-200K	3000	80	500 644	110 35	240	180	380 244	330 186	24	50	125	M16	4	32	100	18	4	990 1025	515	88 94	210 208
KhE 65-40-315D	3000	125	803	140	395	250	348	290	24	65	65	19	4	40	110	19	4	1520	645	130	357
KhE 65-50-160D	3000	80	660	110	222	160	450	400	24	65	145	M16	4	50	125	18	4	1085	480	62	224
KhE 80-50-200D	3000	100	700	120	270	200	350	290	23	80	160	19	8	50	125	19	4	1220	663	95	265
KhE 80-50-315D	1500	125	700	105	410	280	350	290	23	80	160	19	8	50	125	19	4	1330	690	124	300
KhE 80-65-160K	3000	100	740	130	260	180	490	440	24	80	160	M16	8	65	145	18	4	1140	518	66	276
KhE 100-65-200D	1500 3000	100	800	105	355	225	350	290	23	100	180	19	8	65	145	19	4	1370	700	89	260
KhE 100-65-315D	1500	140	1000	105	405	280	350	290	23	100	180	19	8	65	145	19	4	1332	690	124	300
KhE 125-100-400K	1500	140	970	110	410	355	610	560	23	125	210	19	8	100	180	19	8	1690	800	212	690 715
KhE 200-150-400D	1500	160	940	175	485	450	650	570	30	200	295	23	12	150	240	23	8	1750	935	180	840

Performances of KhE and Kh types pumps (n=3000 rpm)

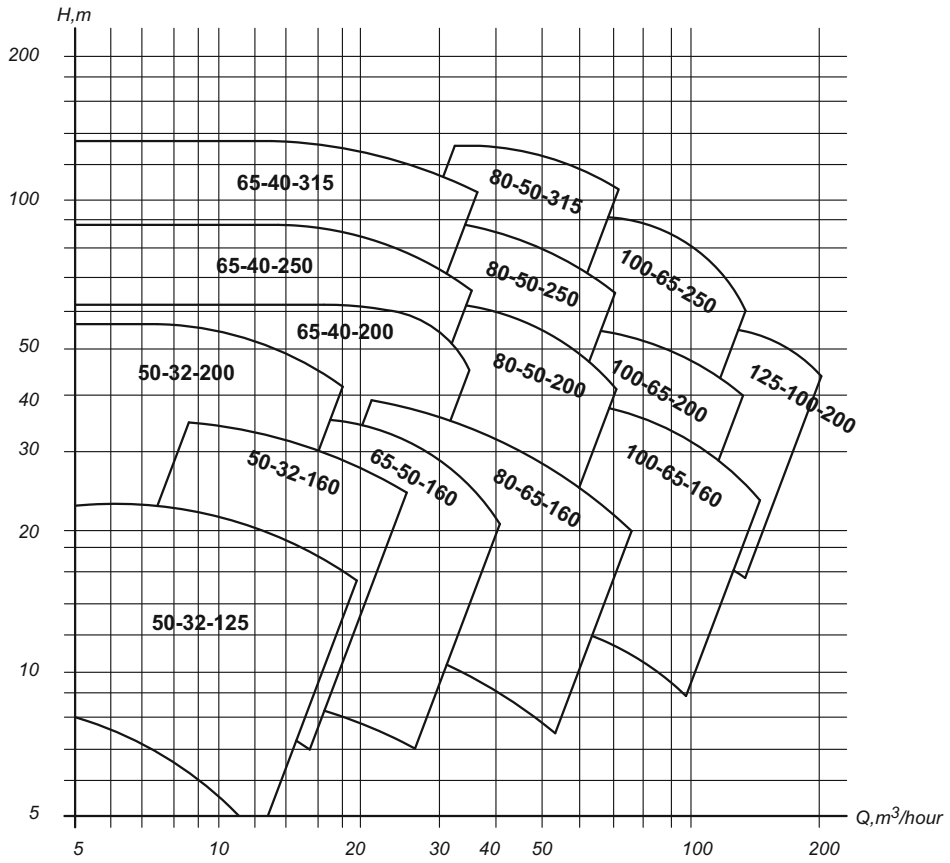

Performances of KhE and Kh types pumps (n=1500 rpm)

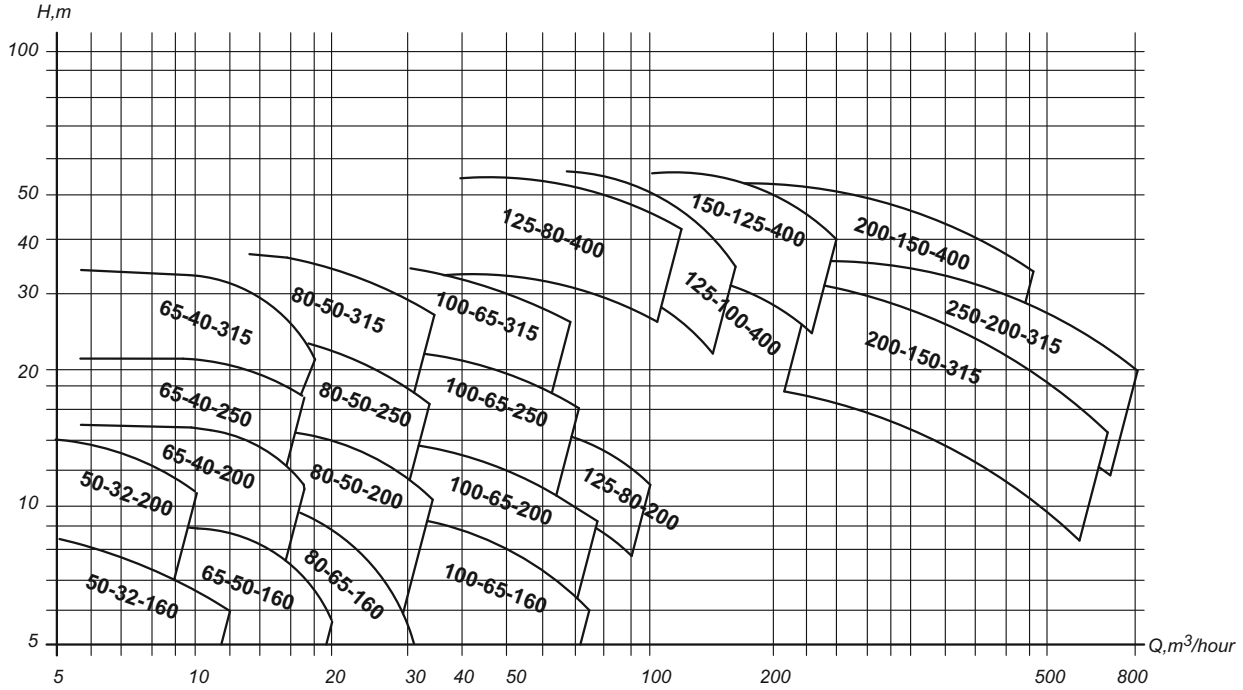

Overall and connection dimensions of Kh-200-150-315-A,T, Kh-200-150-400-A,T, Kh-250-200-315-A,T electric pumping units

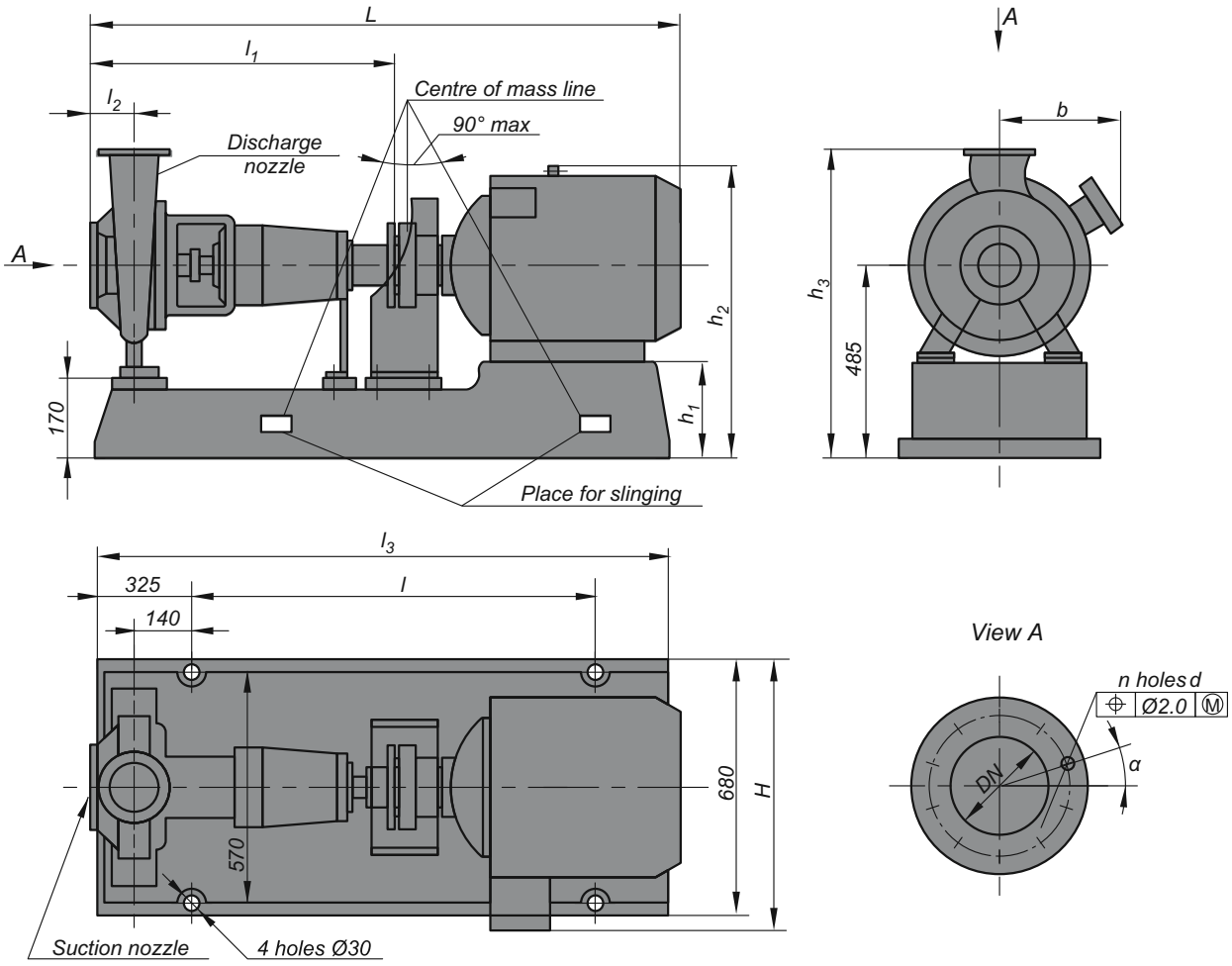

1. Connection dimensions of flange as per GOST 12815-80, version 1, row 2, PN 1.6 MPa (16 kgf/cm²) for DN are shown in the table.
2. l=940 mm is for units Kh-200-150-315-A,T, Kh-200-150-400-A,T, l=1050 mm is for Kh-250-200-315-A,T.

Engine	Dimensions, mm												n, pcs.	Weight of unit, kg
	L	l_1	l_2	l_3	H	h_1	h_2	h_3	b	DN	α	t		
Kh 200-150-315-A,T														
4A225M4	1675	830	160	1580	680	260	835	885	323	150	22°30'	22°	8	690
4A250S4	1750				693	235	875		353	200	15		12	830
V22SM4	1775				750	260	920		410					835
V250S4	1875				840	235	865		500					1020
Kh 200-150-400-A,T														
4A250M4	1790	830	160	1580	680	235	875		-	150	22°30'	22°	8	920
4A280M4	2045			1700	875	205	905		535	200	15		12	1230
4A280S4	2005			1700	875	205	905		535					1180
V250M4	1925			1580	840	235	865	935	500					1145
V280S4	1975			1700	953	205	915		600					1350
4A250S4	1750			1580	850	235	765							840
V250S4	1875				840	235	865	885	500					1020
Kh 250-200-315-A,T														
4A250M4	1850	890	220	1580	680	235	875	885	-	200	22°	15°	12	990
4A280M4	2105			1700	875	205	905		535	250	25°			1200
4A280S4	2065			1700	875	205	905		535					1250
V250M4	1985			1580	840	235	865		500					1215
V280S4	2035			1700	953	205	915							1420

Note: value of discharge nozzle dimension is in numerator, value of suction nozzle dimension is in denominator.

Performances and curves of Kh 200-150-315-A,T pumping unit at the rotational speed n=24 s^{-1} (1450 rpm) with water of density ρ = 1000 kg/m^3

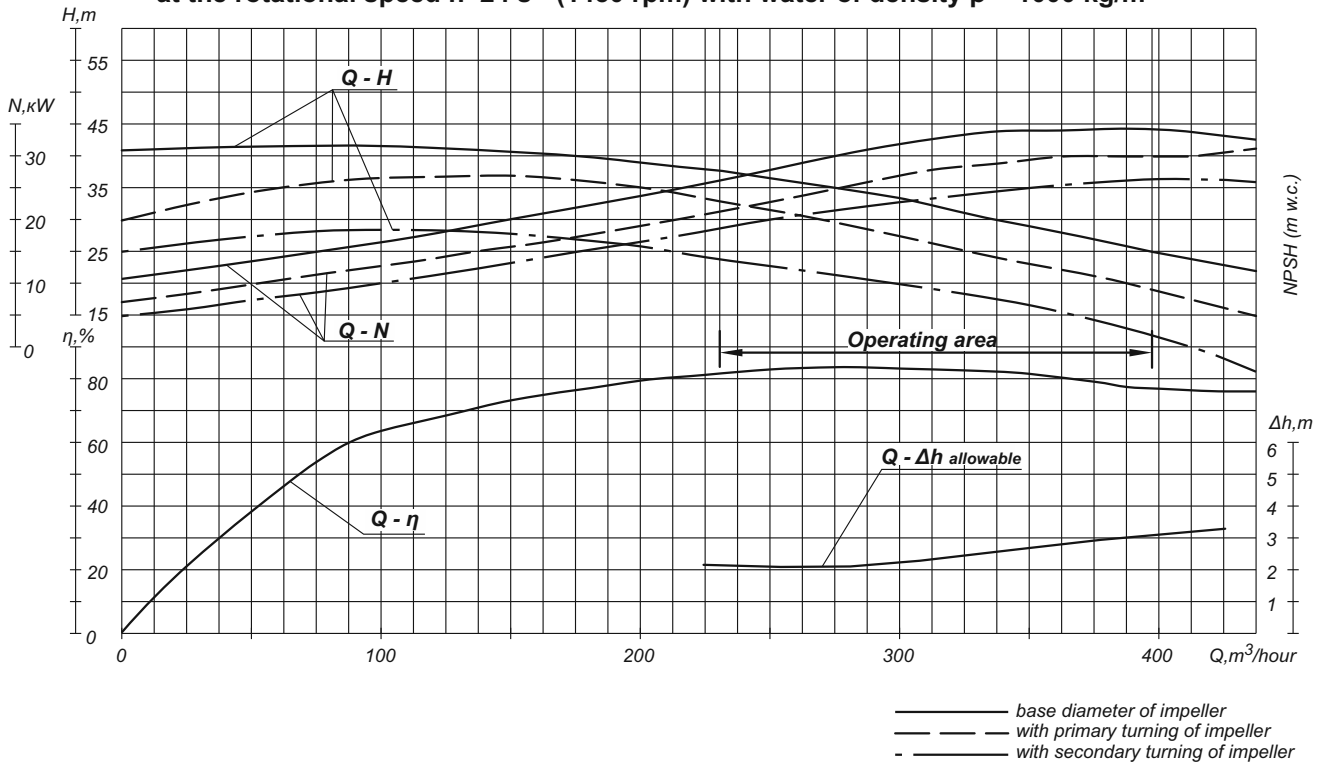

Performances and curves of Kh 200-150-400-A,T pumping unit at the rotational speed n=24 s^{-1} (1450 rpm) with water of density ρ = 1000 kg/m^3

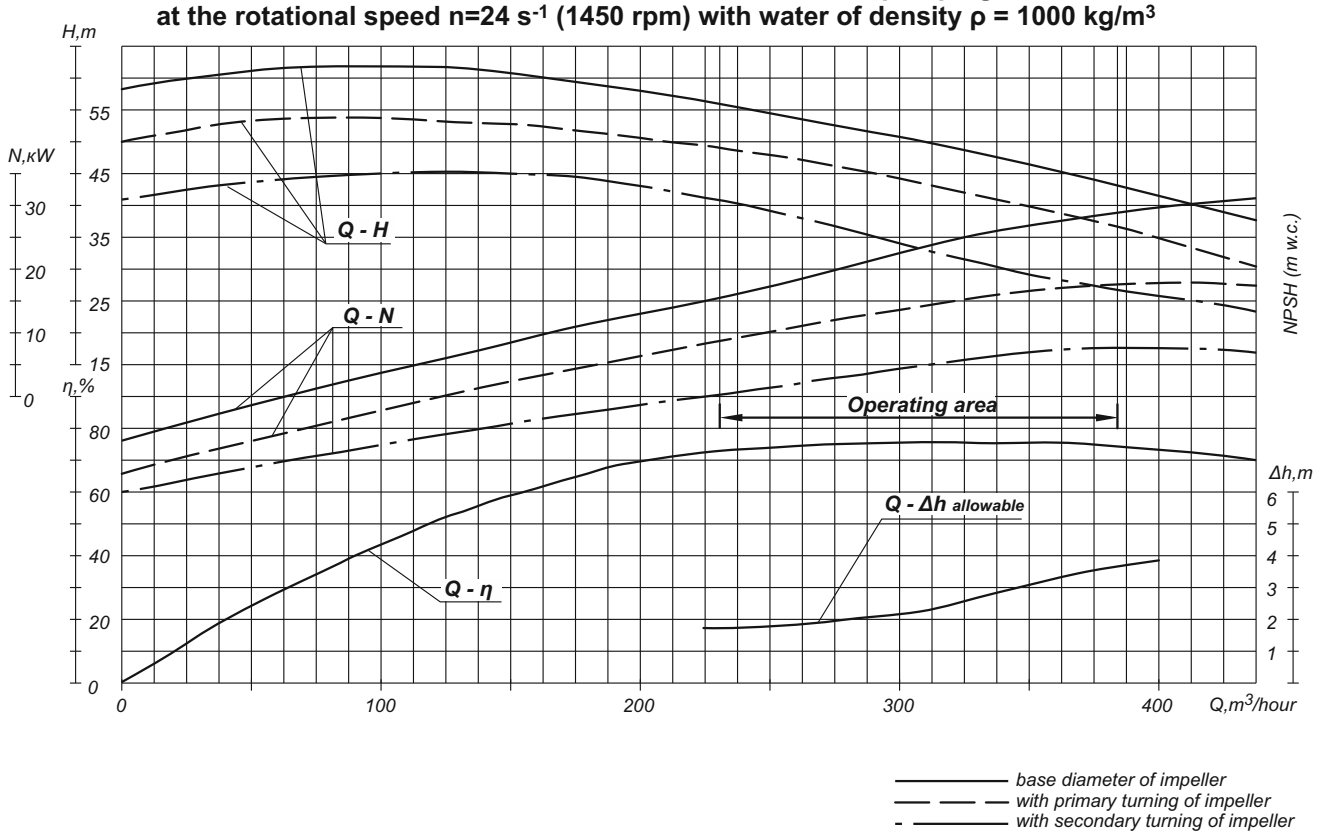

Performances and curves of Kh 250-200-315-A,T pumping unit at the rotational speed n=24 s^{-1} (1450 rpm) with water of density ρ = 1000 kg/m^3

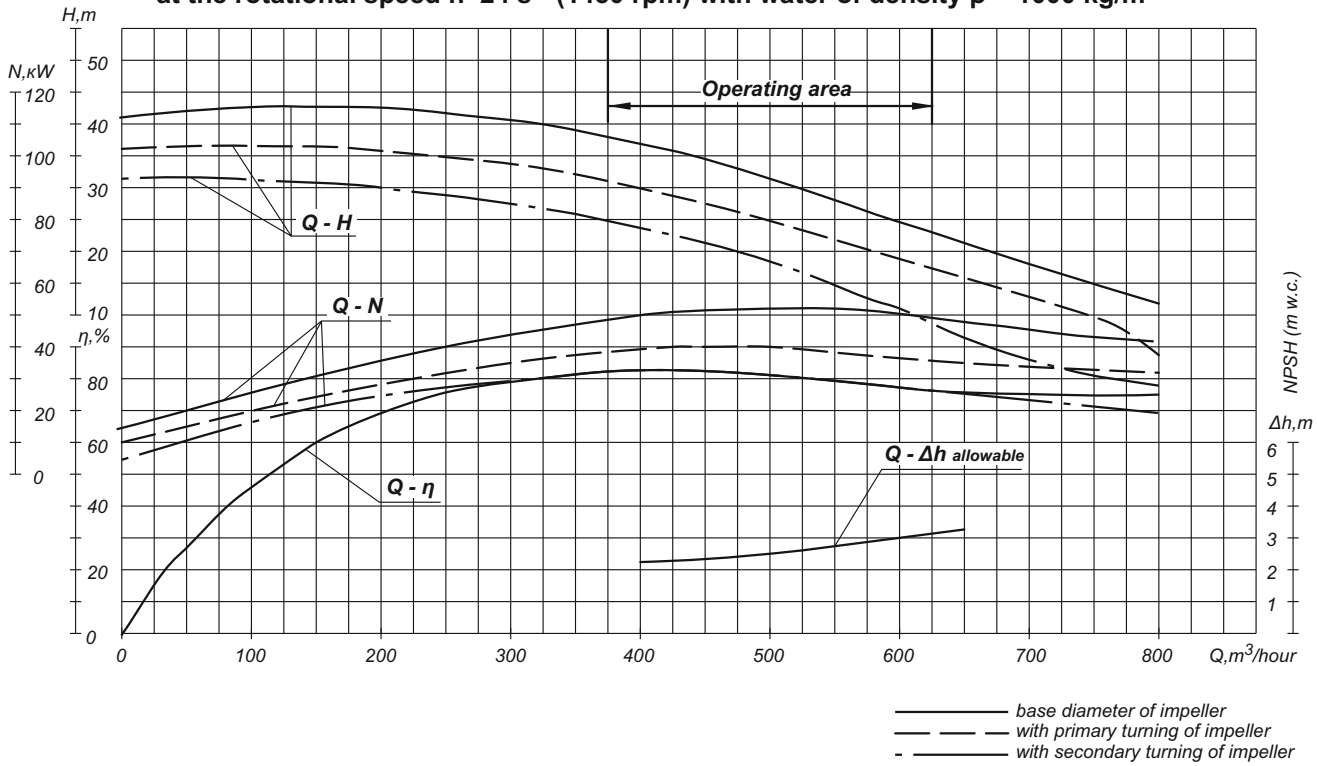

KhPV and KhPE Semi Submerged Chemical Pumps

Submerged pumps and pumping units on their basis are designed for pumping of weak aggressive and neutral liquids with density of no more than 1050 kg/m^3, containing solid impurities up to 0.2 mm and volume concentration no more than 1.5 %.

Electric pumping units are manufactured of two types:

- general-purpose (KhPV);
- of explosive version (KhPE).

Technical data

Designation	Capacity, m^3/hour	Head, m	Power, kW		Efficiency, %		Motor	
			pump	unit	pump	unit	Power, kW	Rotational speed, s^{-1} (rpm)
KhPV 80-50-200-D	0.014(50)	46	10.0	10.8	62	55	15	50(3000)
KhPV 80-50-250-K	0.014(50)	80	20.1	21.6	58	54	22	50(3000)
KhPE 50-32-200-D-55	0.0035(12.5)	50	2.0	2.2	40	38	5.5	50(3000)
KhPE 80-50-200-D-55	0.014(50)	46	10.0	10.8	62	55	15	50(3000)
KhPE 80-50-250-D-55	0.007(25)	20	1.35	1.4	57	53	5.5	25(1500)

The example of pump designation

"Pump KhPV 80-50-200-D"
"Electric pumping unit KhPV 80-50-200-D"
where KhPV - submerged vertical pump;
80 - inlet connection diameter, mm;
50 - discharge pipe diameter;
200 - pump impeller diameter;
D - inner flowing part material;
D - steel 20Х13Л.

"Pump KhPE 50-32-200-D-55"
"Electric pumping unit KhPE 50-32-200-D-55",
where KhPE - submerged vertical pump;
50 - inlet connection diameter, mm;
32 - discharge pipe diameter;
200 - pump impeller diameter;
D - inner flowing part material;
D - steel 20Х13Л;
55 - the type of rotor end seal;
55 - doubled end seal.

The Company improves the pumping equipment and equips pumping units with the motors of different manufactures. Thereby when ordering, please specify overall and mounting dimensions and required parameters according to the recommended form of Data Sheet.

Dimensional drawing of electric pumping unit KhPV 80-50-200-D

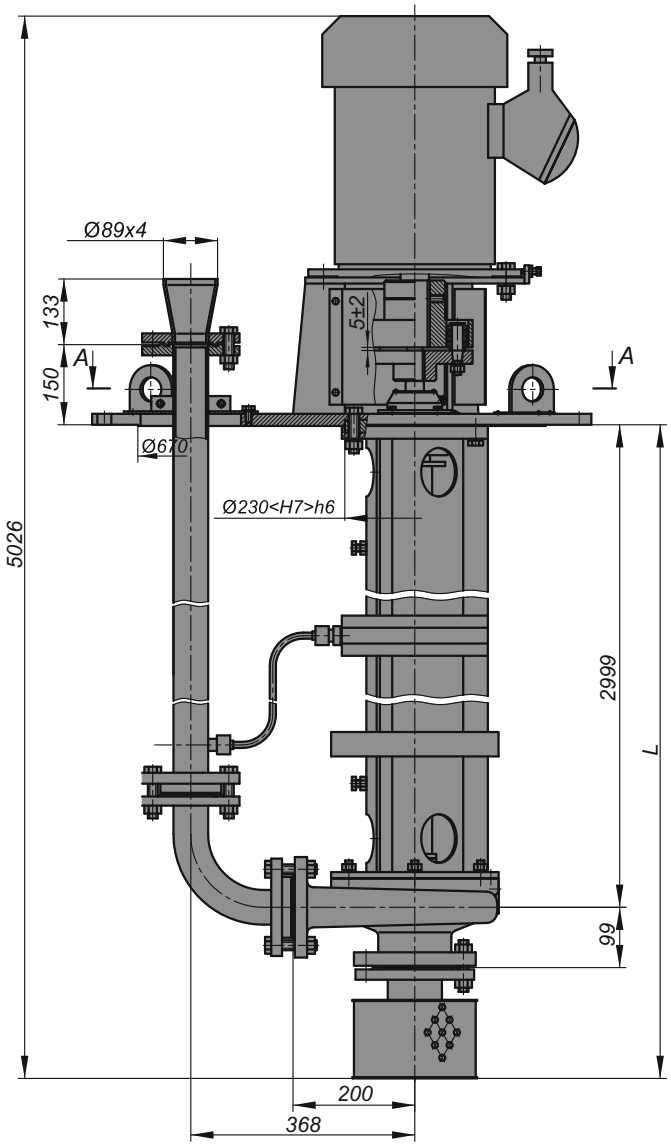

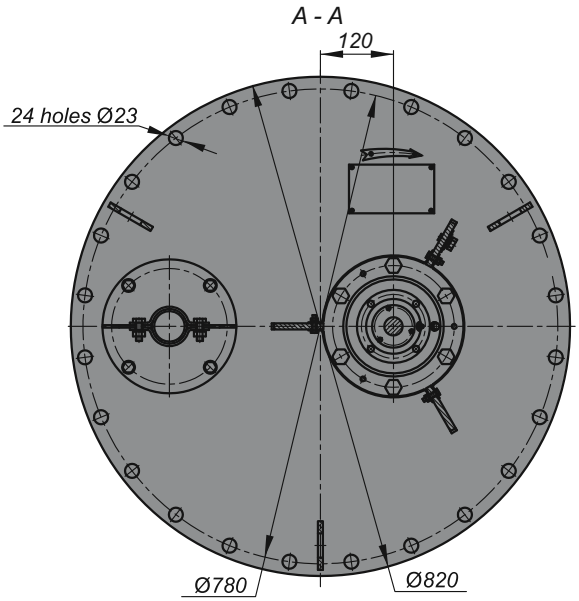

Performances and curves of electric pumping unit KhPV 80-50-200-D

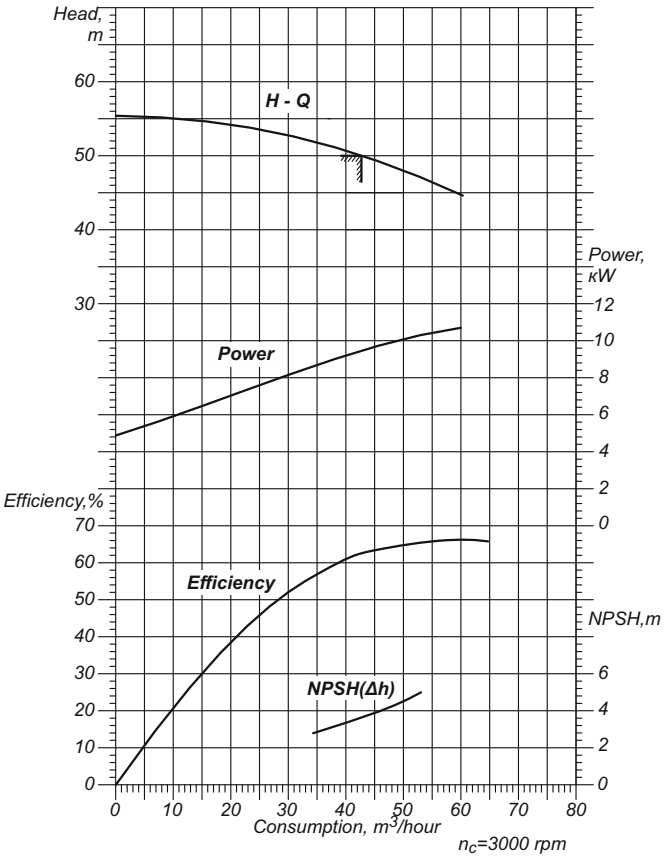

Submerged depth L, mm	Weight, kg
4316	579
3286	589

Dimensional drawing of electric pumping unit KhPV 80-50-250-K

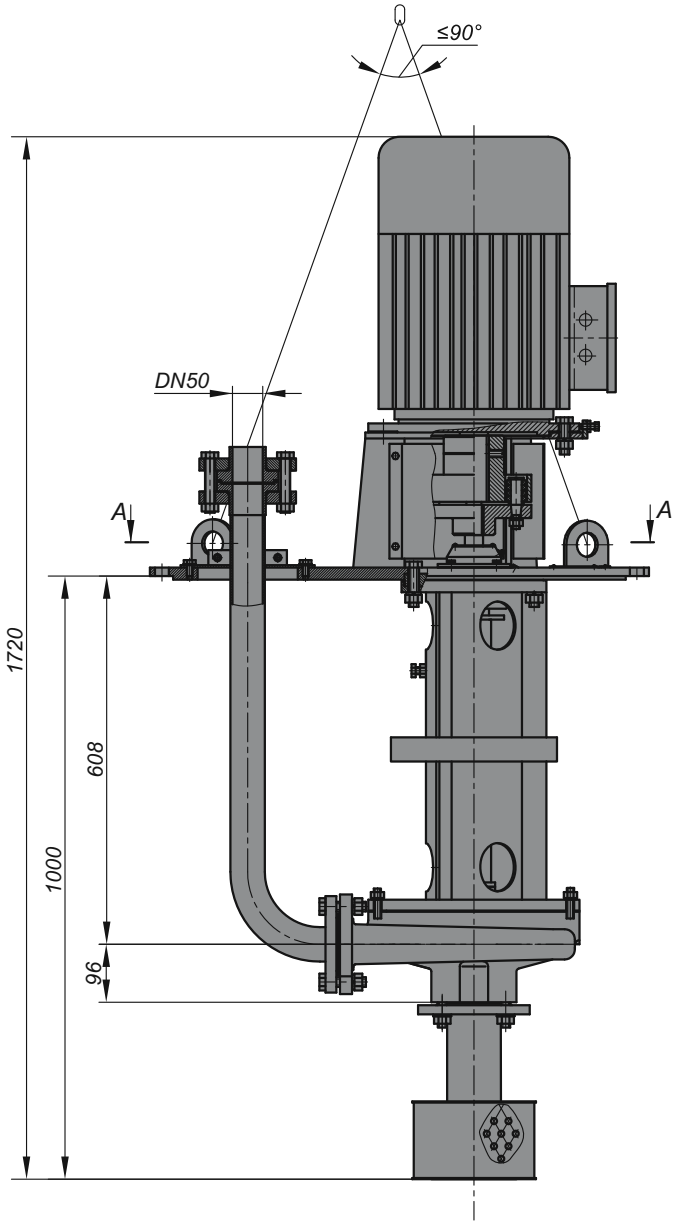

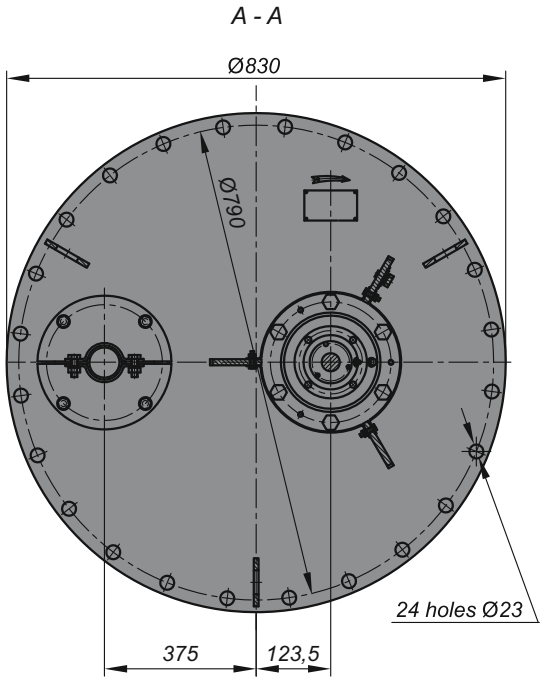

Performances and curves of electric pumping unit KhPV 80-50-250-K

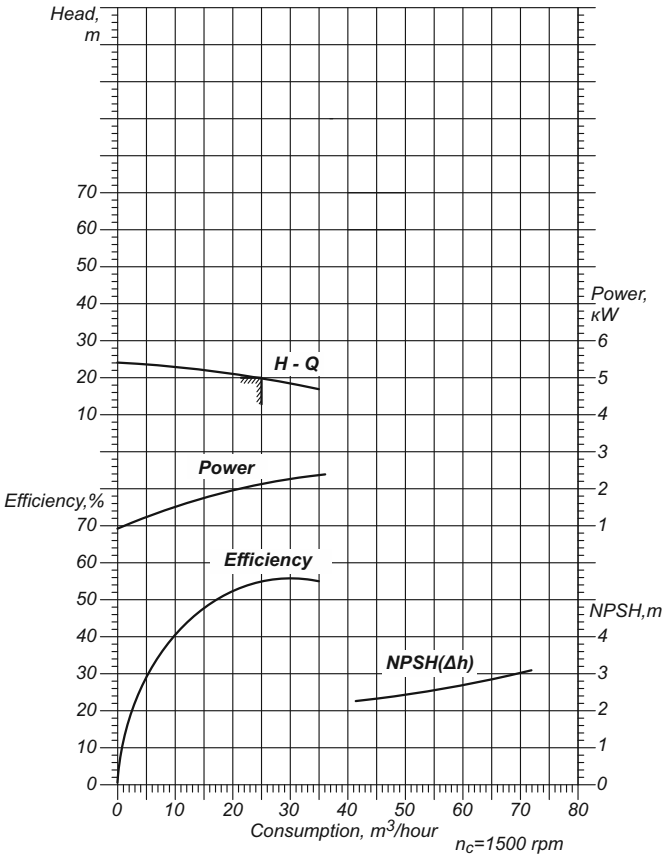

Dimensional drawing of electric pumping unit KhPE 50-32-200-D-55

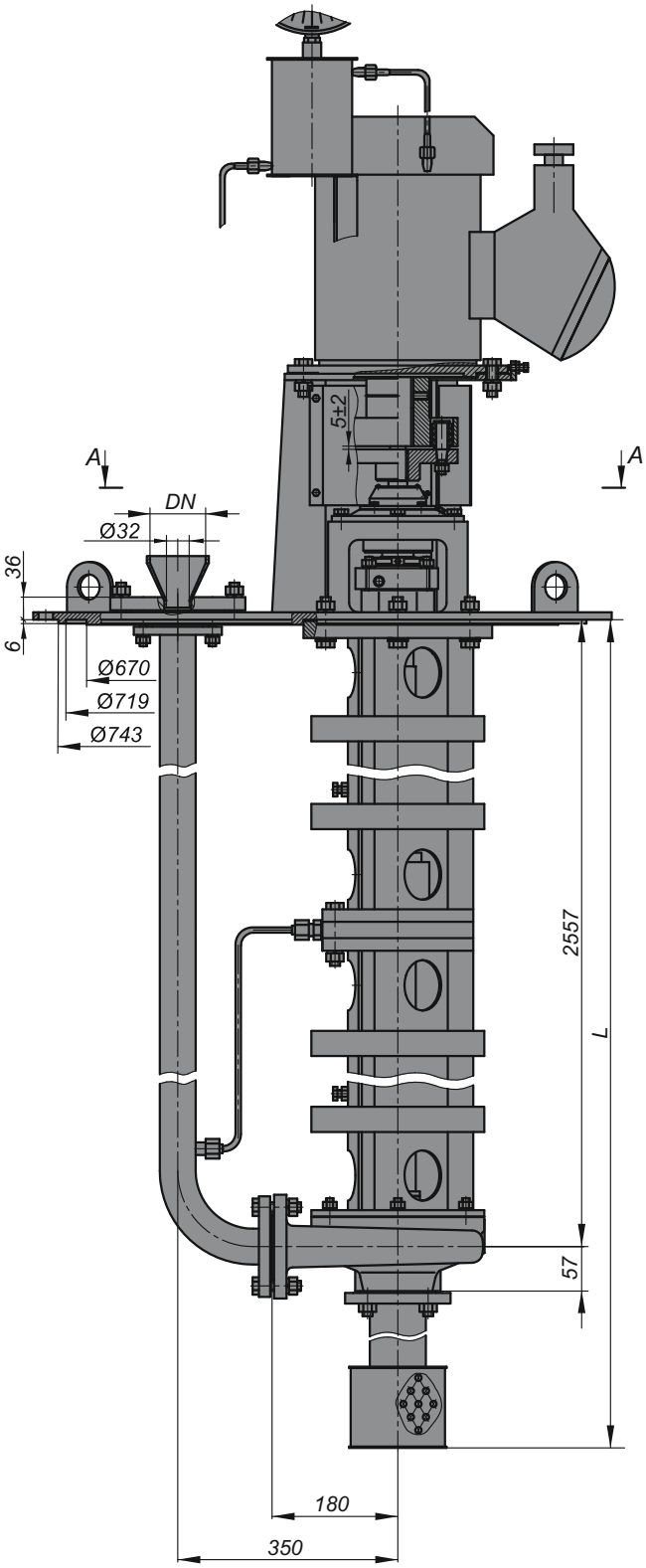

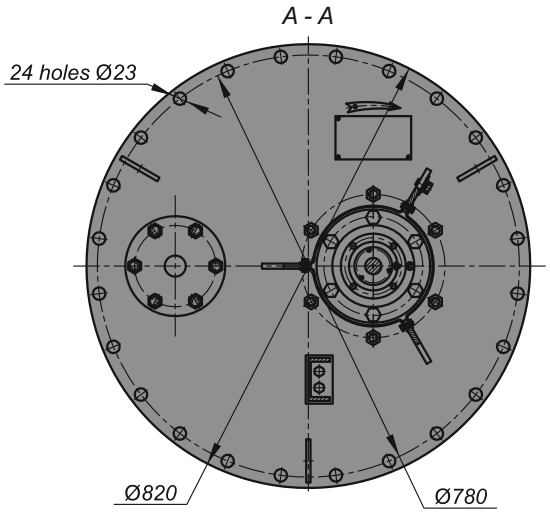

Submerged depth L, mm	*DN*, мм	Weight, kg
2850	50	464
3350	50	466
3750	80	468
4150	80	470
4350	80	471

Performances and curves of electric pumping unit KhPE 50-32-200-D-55

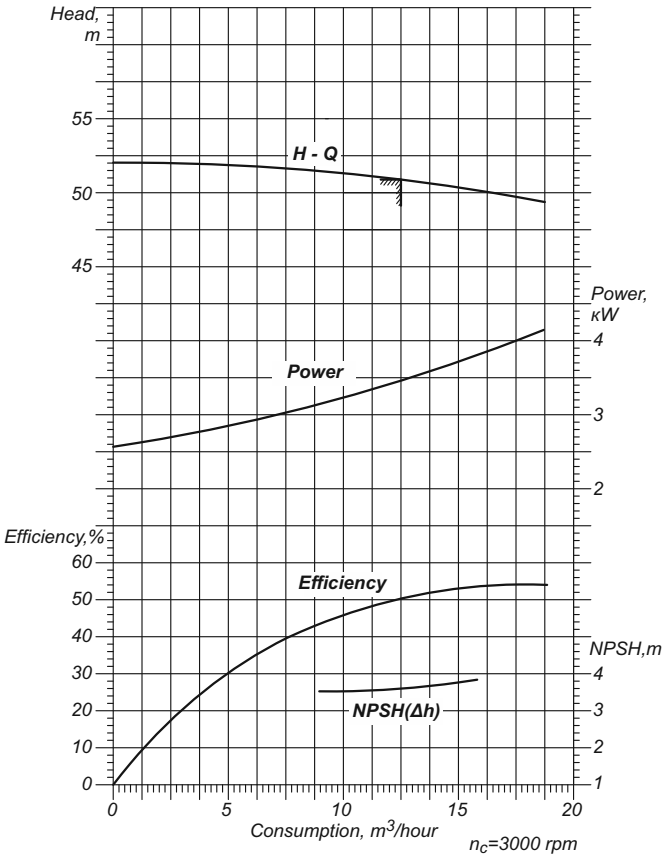

Dimensional drawing of electric pumping unit KhPE 80-50-200-D-55

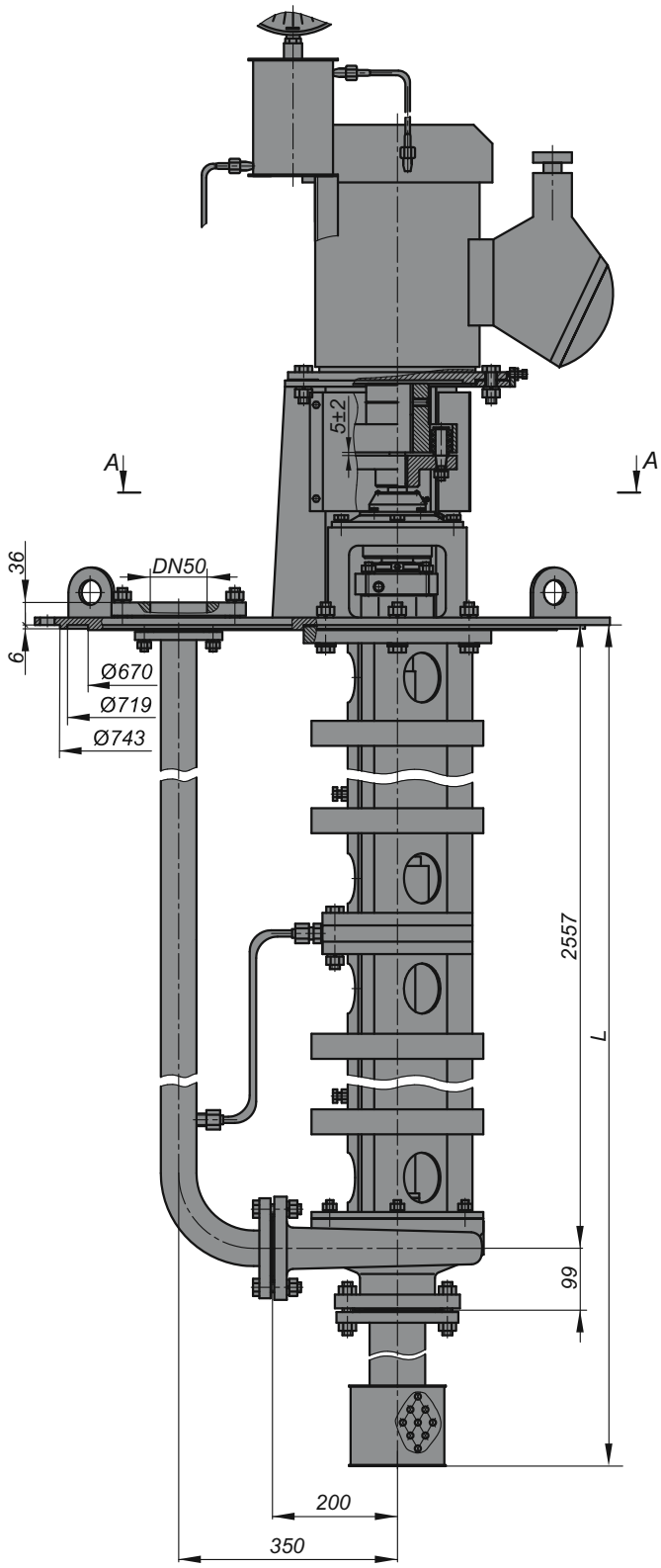

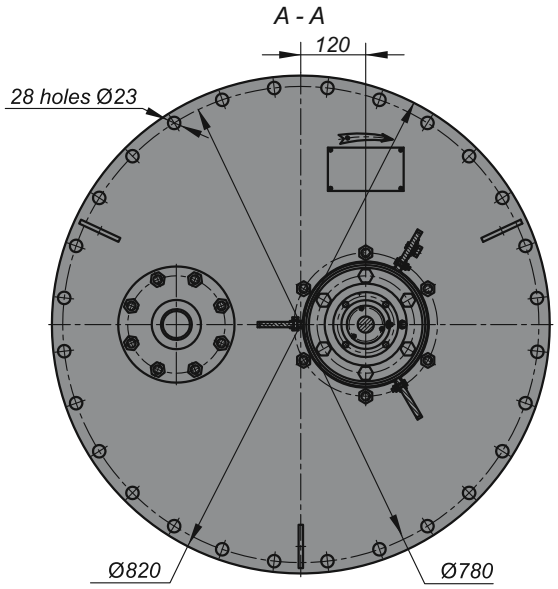

Submerged depth L, mm	Weight, kg
4150	576
3350	571

Performances and curves of electric pumping unit KhPE 80-50-200-D-55

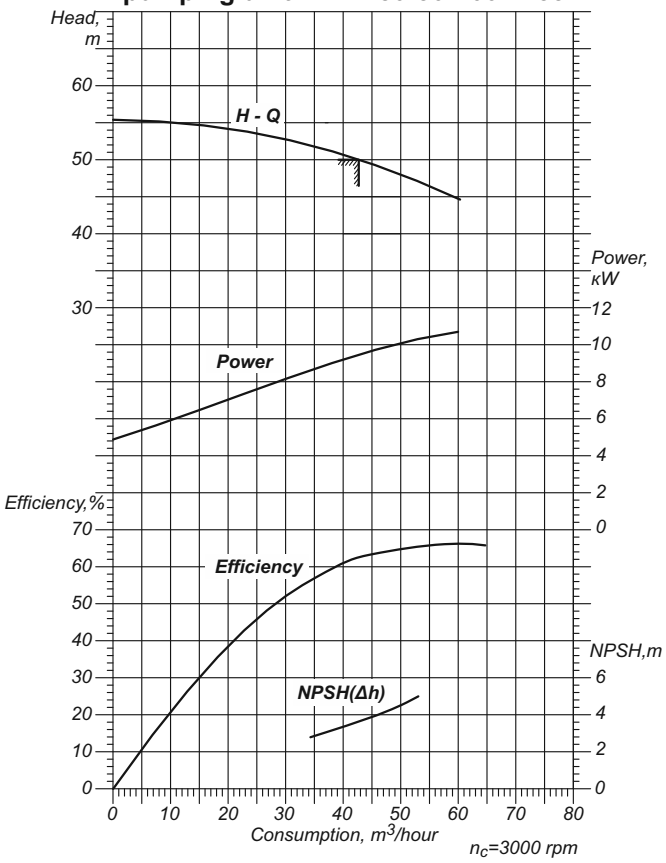

Dimensional drawing of electric pumping unit KhPE 80-50-250-D-55

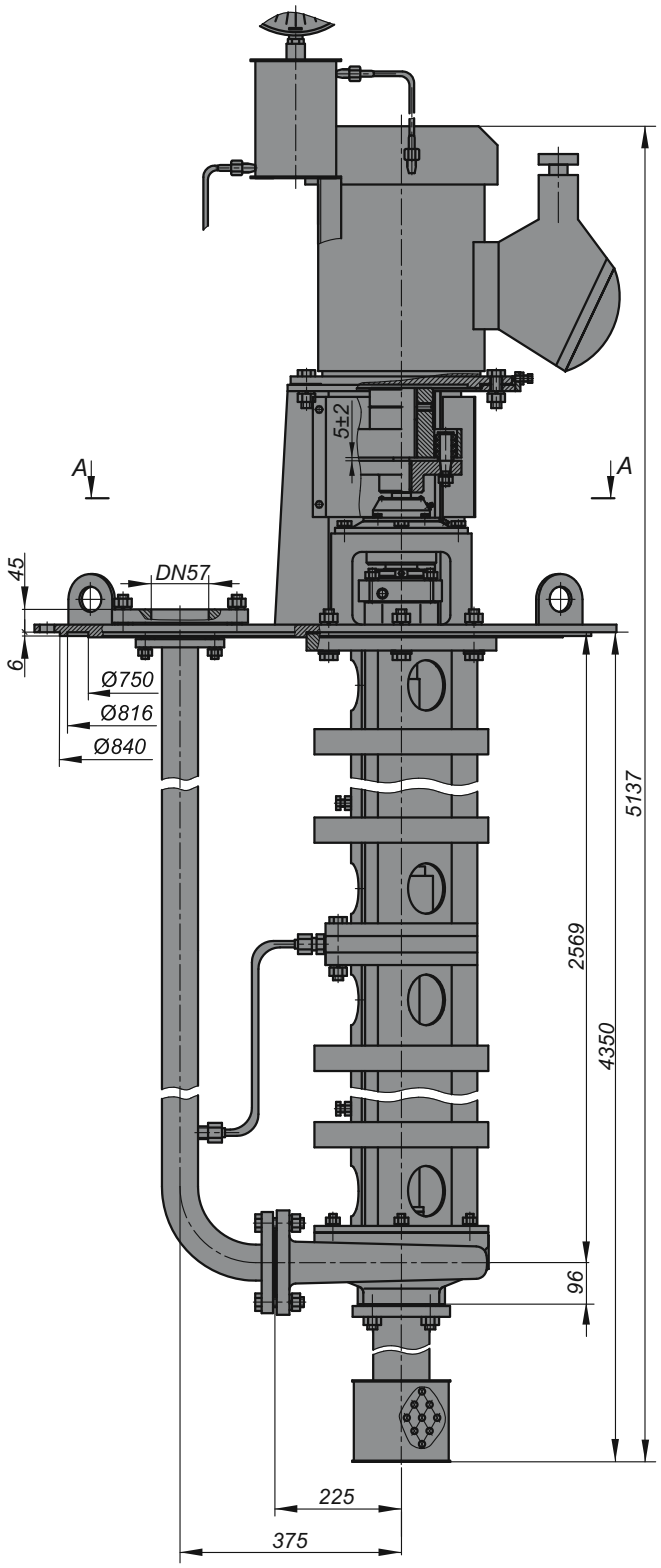

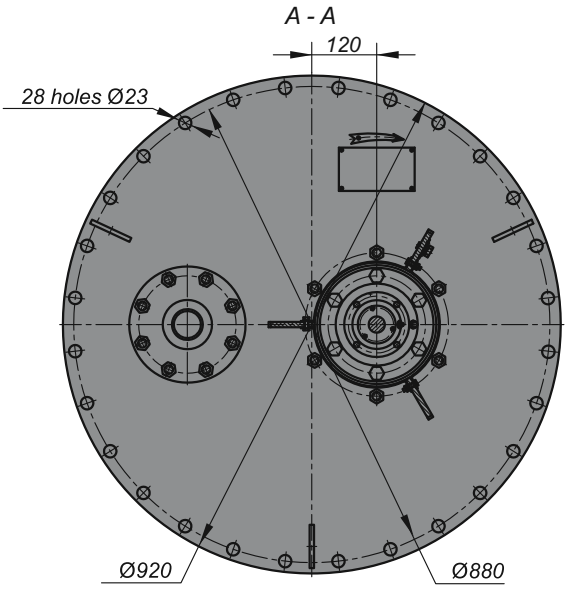

Performances and curves of electric pumping unit KhPE 80-50-250-D-55

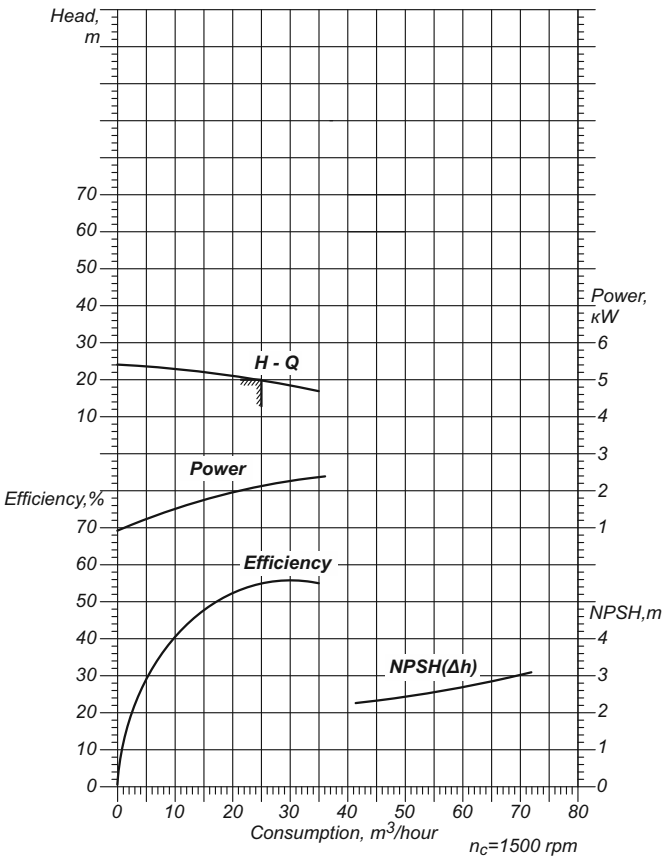

CN Centrifugal Cradle-mounted Pumps

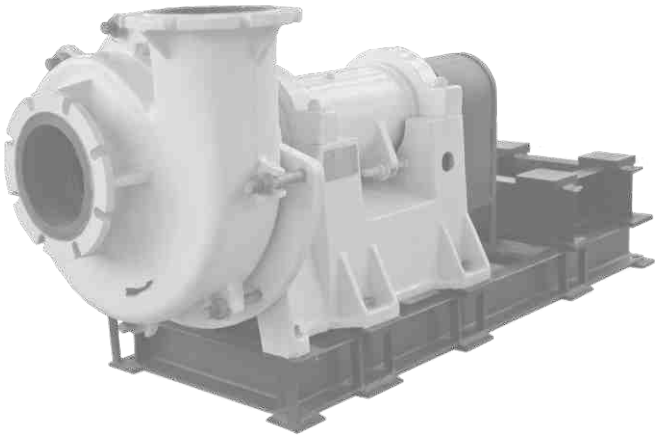

Electric pumping unit of CN type are designed for pumping of storm sewage and soils, household sewage and other contaminated liquids with density to 1300 kg/m^3, pH index of sewage systems.

Centrifugal pump is of horizontal, single stage, one-casing type. Pump inner flowing part consists of pump casing, armor-plated disk and impeller.

Application: systems for industrial and public water supply.

Pumping of combustible liquids and installation of pumping units in areas containing explosive mixtures are not allowed.

Technical data

Designation	Impeller external diameter, mm	Capacity, m^3/hour (m^3/s)	Head, m	Rotational speed, s^{-1} (rpm)	NPSH, m not more	Consumed power, kW		Efficiency, %		Weight, kg	
						pump	unit	pump	unit	pump	unit
CN 225-70	425	225	70	24.2	6.3	77	83*	58	54	1042	-
CN 225-70a	396	(0.0625)	60	(1450)		65	70*	57	53	1037	-
CN 225-70б	361		50			52	56*	56	52	1032	-
CN 540-95	560	540	107	1500	8	250	265	68	64	1080	3060
CN 540-95a	540	540	103	1500	8	230	243	68	64	1080	2810
CN 540-95б	516	540	88	1500	8	200	211	67	63	1080	2810
CN 540-95в	470	540	72	1500	8	165	174	66	62	1080	2810
CN 540-95-1	-	360	50	1000	8	77	82	68	63	1080	2600
CN 540-95a-1	-	360	45	1000	8	68	71	68	64	1080	2250
CN 540-95б-1	-	360	40	1000	8	62	65	67	63	1080	2250
CN 540-95в-1	-	360	35	1000	8	45	49	66	62	1080	2250
CN 800-50	427	800	50	1450	6	175	190	62	57	1250	2300
CN 800-45	408	(0.22)	45	(24.2)		150	162				
CN 800-32	370		32			120	130				

* at density up to ρ=1000 kg/m^3

Material of inner flowing part

Pumps of CN type - grey iron СЧ 25, alloyed with chromium and nickel.

The example of pump designation

“Pump CN 800-50 UKhL”, “Pumping unit CN 800-50 UKhL”,

where CN - centrifugal pump;
800 - capacity, m^3/hour;
50 - head, m;
UKhL - climatic version (for areas with temperate and cold climate);
4 - placement category.

The Company improves the pumping equipment and equips pumping units with the motors of different manufactures. Thereby when ordering, please specify overall and mounting dimensions and required parameters according to the recommended form of Data Sheet.

CN Centrifugal Cradle-mounted Pumps

Dimensional drawing of CN 225-70 and CNH 540-95 pumping units

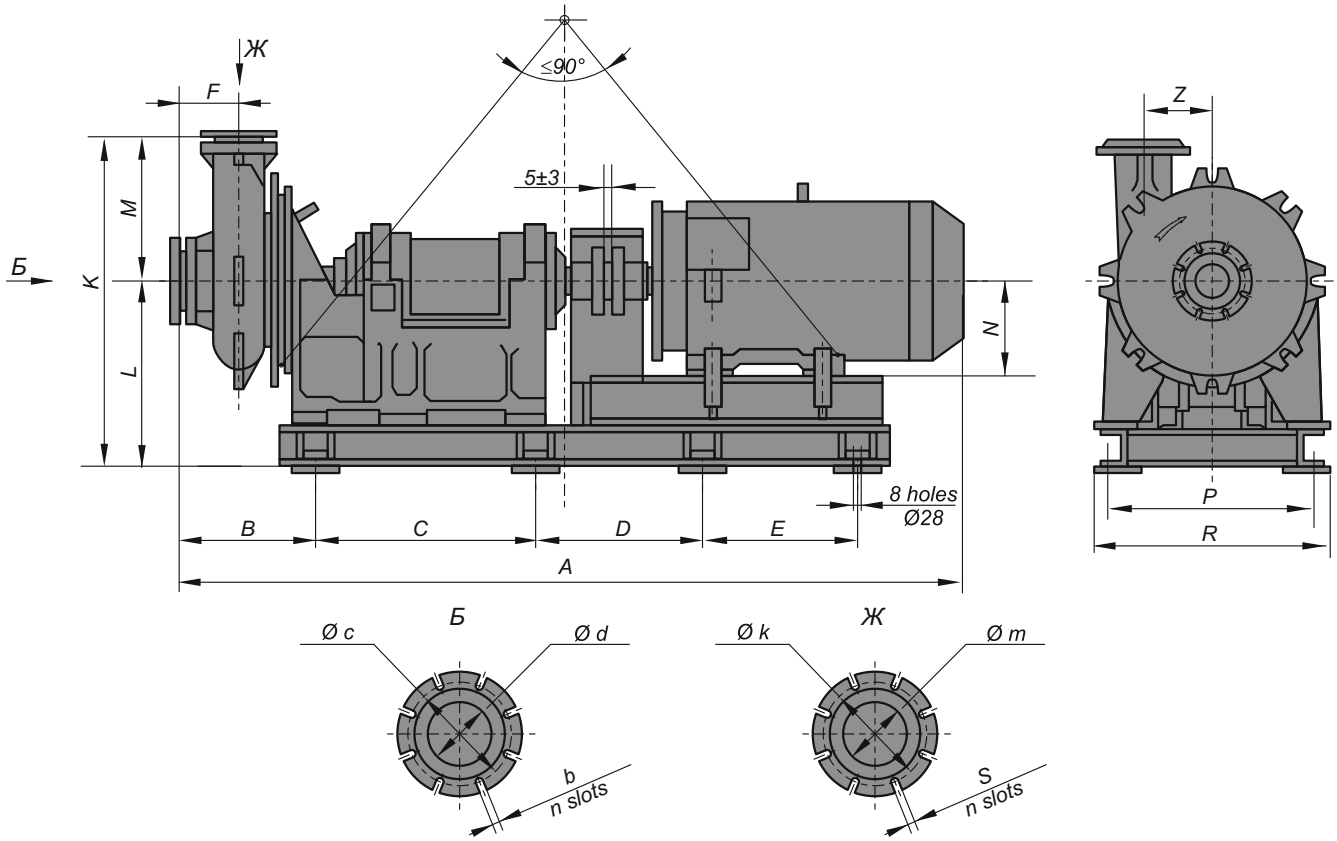

Designation	A	B	C	D	E	K	L	M	N	P	R	F	Z	b	n	c	d	k	m	S
CN 225-70	2455	435	780	585	550	1150	690	460	250	660	750	170	220	25	8	240	150	210	125	21
CN 540-95	2900	500	780	585	755	1190	690	500	315	660	834	230	330	24	12	350	250	295	195	24

Performances and curves of CN 225-70 pumping units at the rotational speed n=1480 rpm with water of density ρ = 998 kg/m³

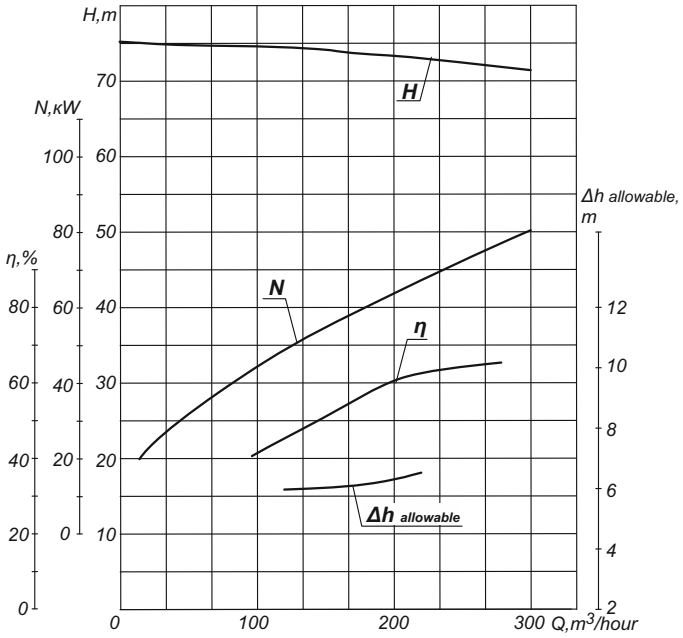

Performances and curves of CN 540-95 pumping units at the rotational speed n=1480 rpm with water of density ρ = 998 kg/m³

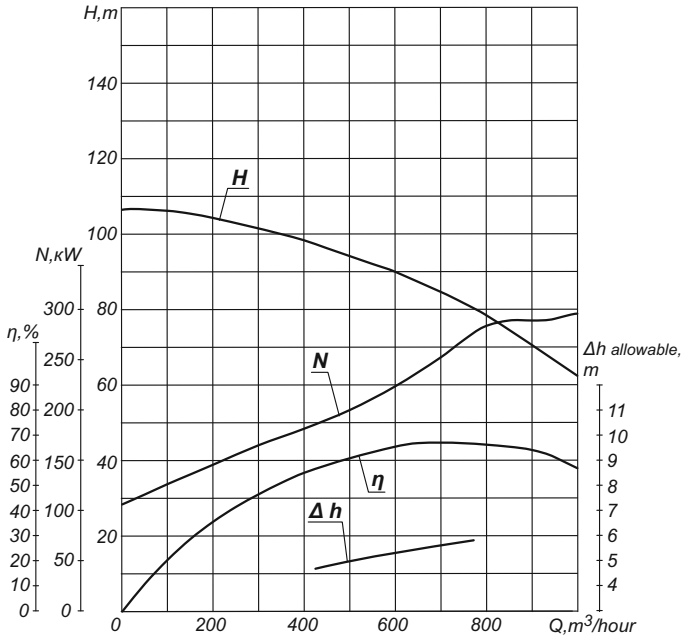

Dimensional drawing of CN 800-50 pumping units

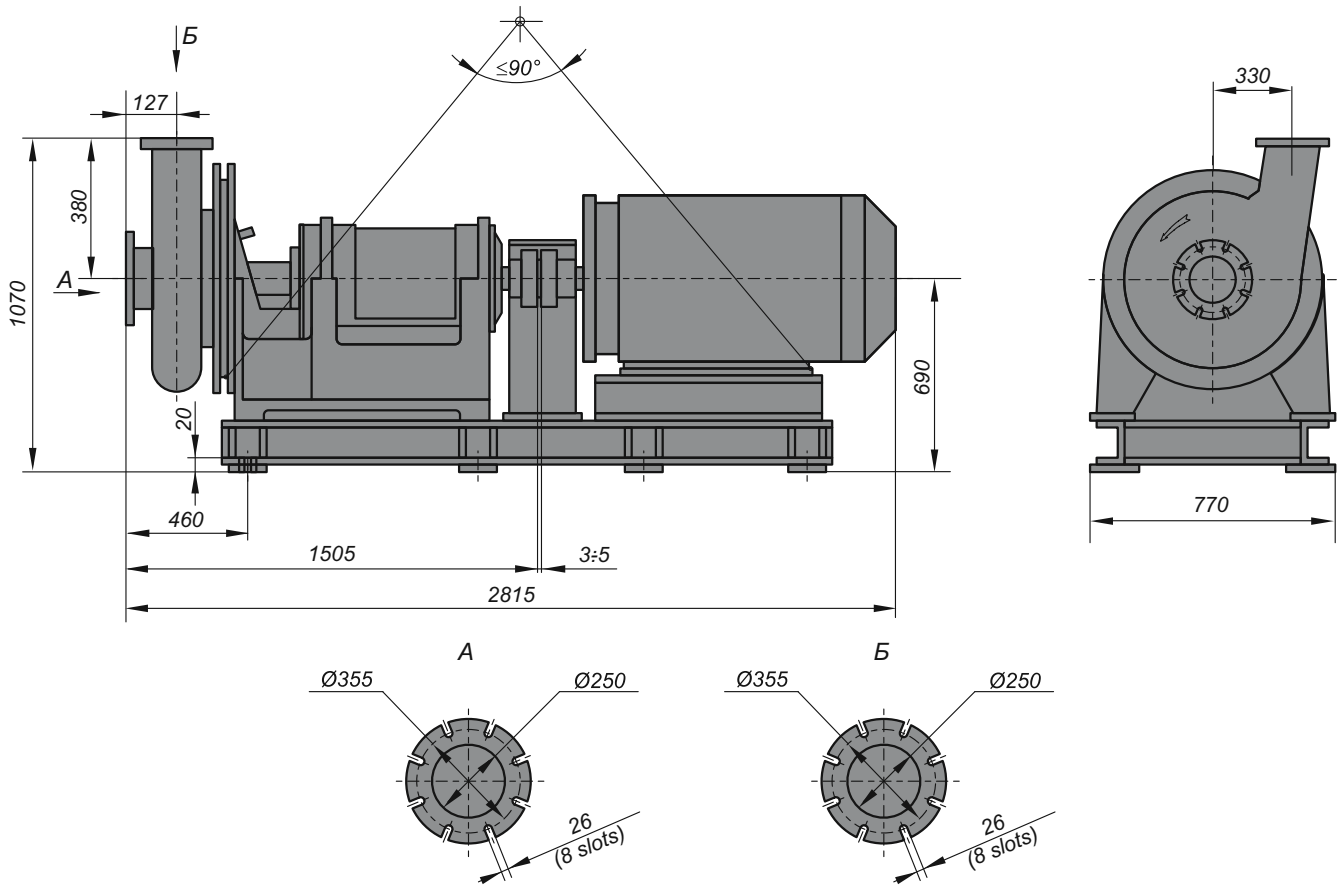

Performances and curves of CN 800-50 pumping units at the rotational speed n=1480 rpm with water of density ρ = 998 kg/m³

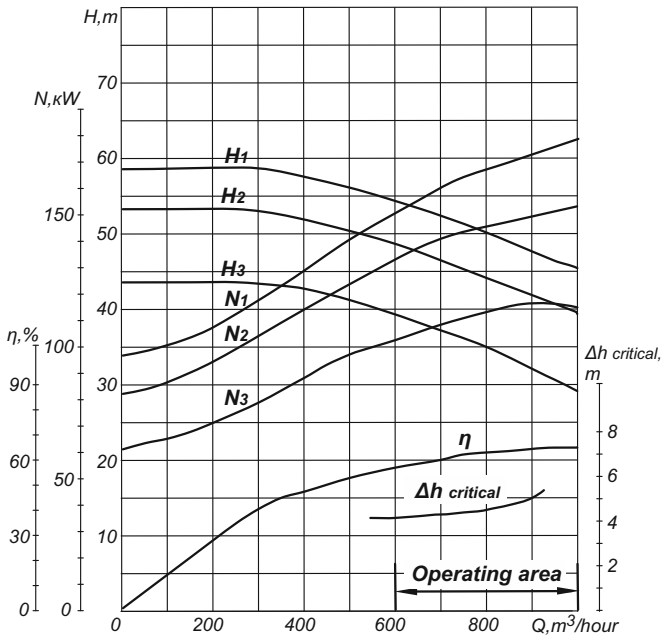

1 - for D2=427 mm 2 - for D2=408 mm 3 - for D2=370 mm

CPN Centrifugal Cradle-mounted Pumps for Liquids with Foreign Impurities

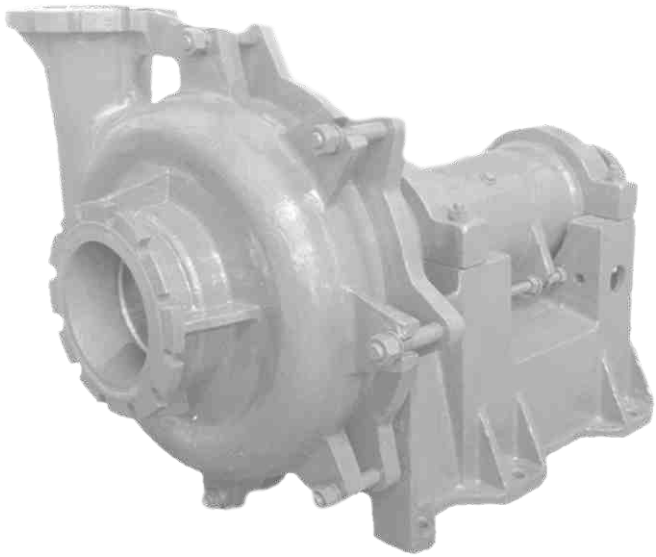

Electric pumping unit of CPN type are designed for pumping of abrasive hydraulic fluids with the following properties:

- density up to 1300 kg/m^3;
- pH index from 6 to 12;
- temperature from 5 to 70°C;
- volume concentration of solid impurities up to 30%;
- micro-hardness of particles up to 11000 MPa.

Centrifugal pump is of horizontal, single stage, one-casing type. Pump inner flowing part consists of pump casing, armor-plated disk and impeller made of wear-resistant alloy.

Applied for pumping of products of rocks processing, ash, slag, ferrous and nonferrous metal ores tails, argillo-arenaceous rocks, grained sands, sand and gravel rocks, gravel and spoiling rocks.

Application: ferrous and nonferrous industry, coal and metal mining industry, melioration and irrigation, industrial and public water supply.

Pumping of combustible liquids and installation of pumping units in areas containing explosive mixtures are not allowed.

Technical data

Designation	Impeller external diameter, mm	Capacity, m^3/hour (m^3/s)	Head, m	Rotational speed, s^{-1} (rpm)	NPSH, m not more	Consumed power, kW		Efficiency, %		Weight, kg	
						pump	unit	pump	unit	pump	unit
CPN 225-70	425	225	70	24.2	6.3	77	83*	58	54	1042	-
CPN 225-70a	396	(0.0625)	60	(1450)		65	70*	57	53	1037	-
CPN 225-70b	361		50			52	56*	56	52	1032	-
CPN 540-95	560	540	107	1500	8	250	265	68	64	1080	3060
CPN 540-95a	540	540	103	1500	8	230	243	68	64	1080	2810
CPN 540-95b	516	540	88	1500	8	200	211	67	63	1080	2810
CPN 540-95v	470	540	72	1500	8	165	174	66	62	1080	2810
CPN 540-95-1	-	360	50	1000	8	77	82	68	63	1080	2600
CPN 540-95a-1	-	360	45	1000	8	68	71	68	64	1080	2250
CPN 540-95b-1	-	360	40	1000	8	62	65	67	63	1080	2250
CPN 540-95v-1	-	360	35	1000	8	45	49	66	62	1080	2250
CPN 800-50	427	800	50	1450	6	175	190	62	57	1250	2300
CPN 800-45	408	(0.22)	45	(24.2)		150	162				
CPN 800-32	370		32			120	130				

* at density up to ρ=1000 kg/m^3

Material of inner flowing part

Pumps of CPN type - chromic iron ИЧХ-28Н2.

The example of pump designation

“Pump CPN 540-96 UKhL4”, “Pumping unit CPN 540-95 UKhL4”;

where CPN - centrifugal sand pump;
500 - capacity, m^3/hour;
95 - head, m;
UKhL - climatic version (for areas with temperate and cold climate);
4 - placement category according to GOST 15150-69.

The Company improves the pumping equipment and equips pumping units with the motors of different manufactures. Thereby when ordering, please specify overall and mounting dimensions and required parameters according to the recommended form of Data Sheet.

CPN Centrifugal Cradle-mounted Pumps for Liquids with Foreign Impurities

Dimensional drawing of CPN 225-70 pumping units

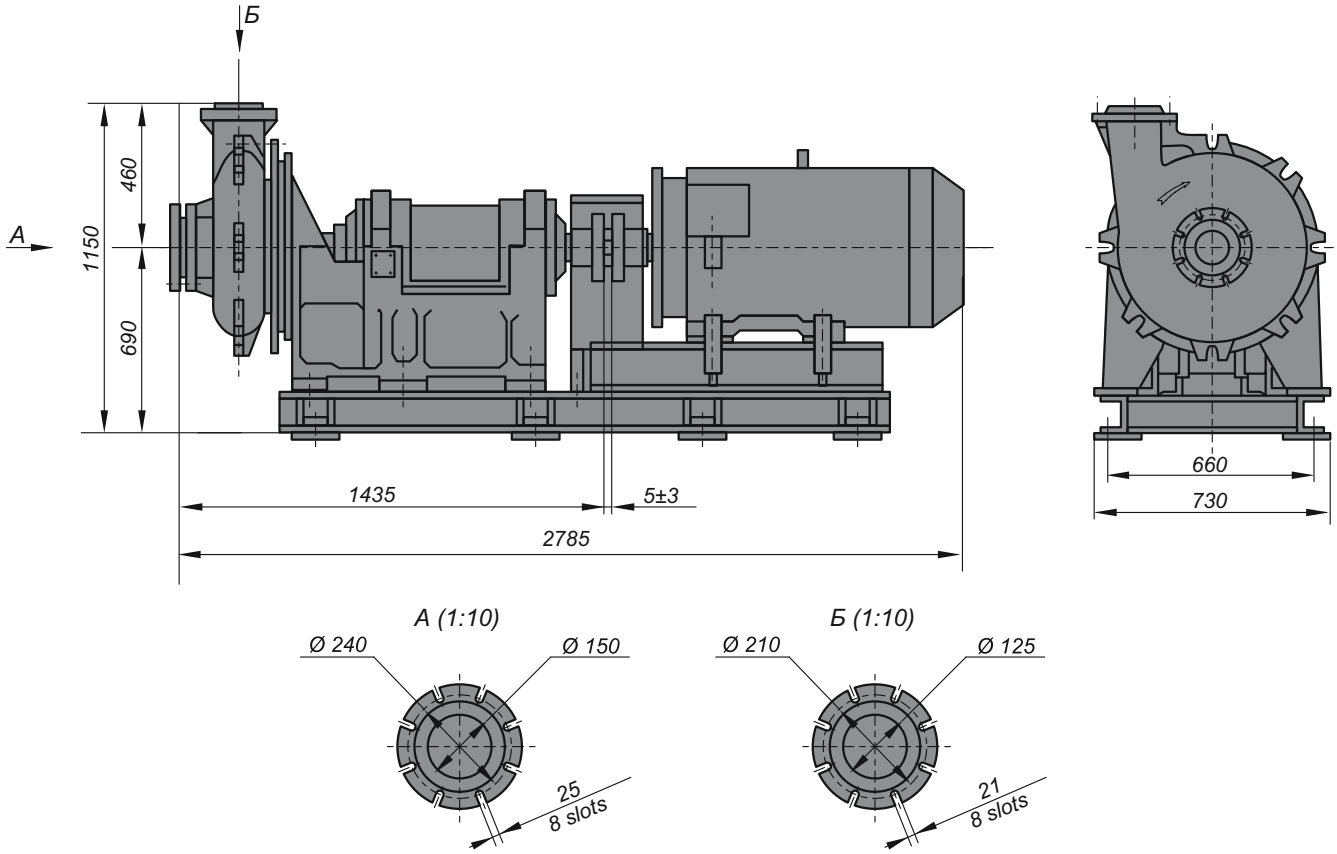

Performances and curves of CPN 225-70 pumping units at the rotational speed n=1480 rpm with water of density ρ = 998 kg/m^3

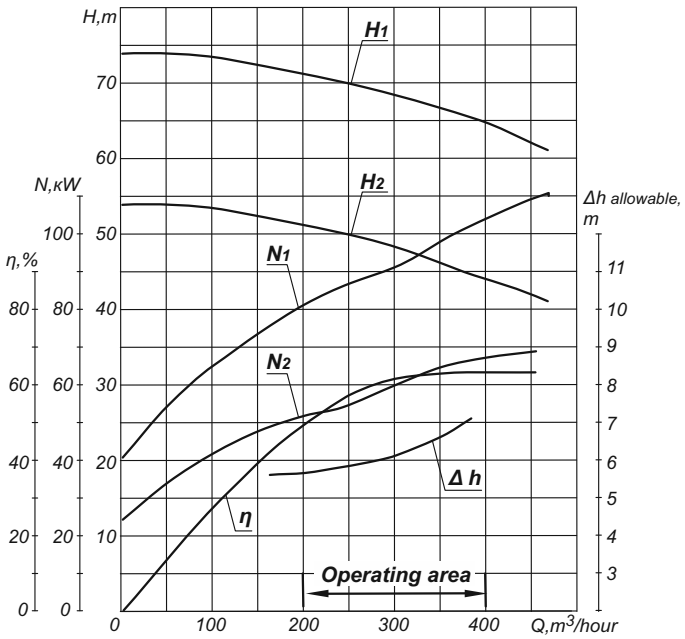

1 - for D2=425 mm 2 - for D2=361 mm

CPN Centrifugal Cradle-mounted Pumps for Liquids with Foreign Impurities

Dimensional drawing of CPN 540-95… pumping units

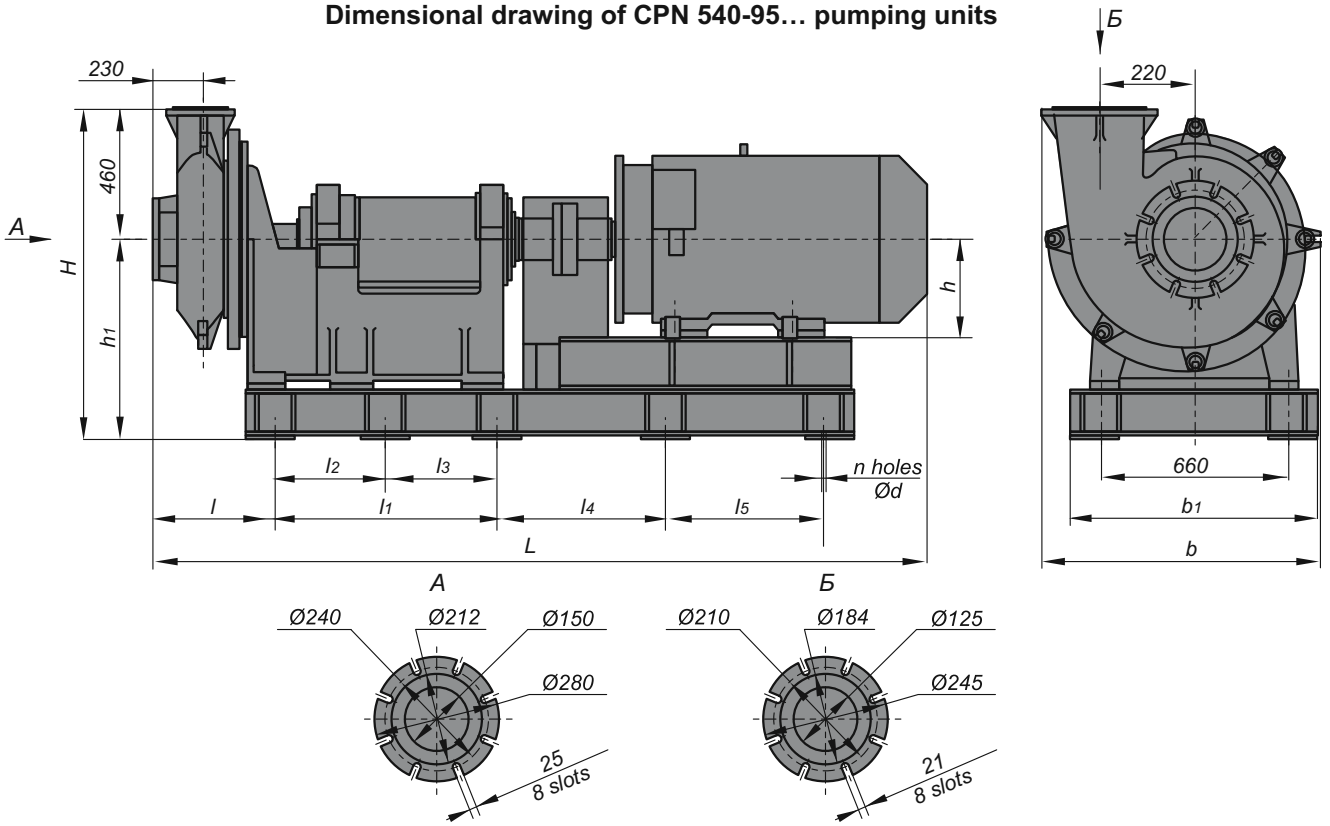

Designation	Overall dimensions, mm													
	L	l	l1	l2	l3	l4	l5	H	h	h1	b	b1	n	d
CPN 540-95	3085	500	780	-	-	585	755	1190	355	690	973	834	8	28
CPN 540-95a	2925	500	780	-	-	585	755	1190	355	690	973	834	8	28
CPN 540-95b	2925	500	780	-	-	585	755	1190	355	690	973	834	8	28
CPN 540-95v	2925	500	780	-	-	585	755	1190	355	690	973	834	8	28
CPN 540-95-1	2830	512	-	520	500	500	500	1230	280	730	973	772	10	28
CPN 540-95a-1	2605	512	-	520	500	500	500	1230	280	730	973	772	10	28
CPN 540-95b-1	2605	512	-	520	500	500	500	1230	280	730	973	772	10	28
CPN 540-95v-1	2605	512	-	520	500	500	500	1230	280	730	973	772	10	28

Performances and curves of CPN 540-95 pumping units at the rotational speed n=1480 rpm with water of density ρ = 998 kg/m^3

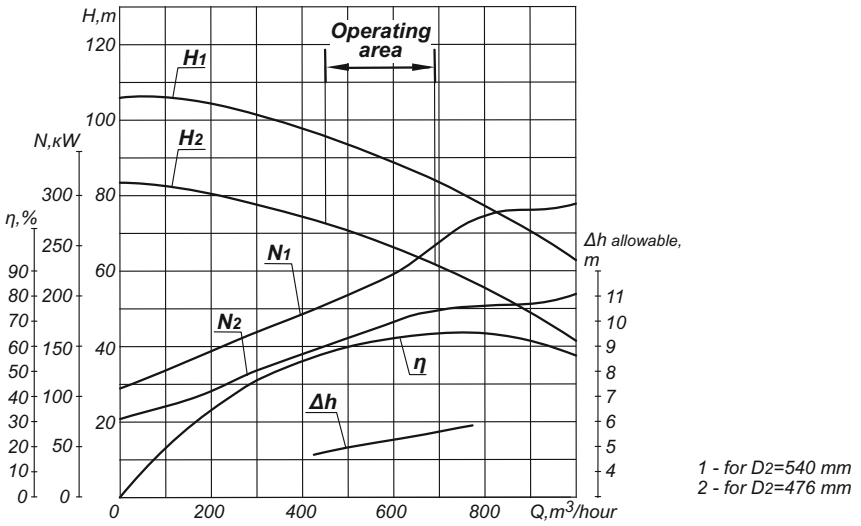

CPN Centrifugal Cradle-mounted Pumps for Liquids with Foreign Impurities

Dimensional drawing of CPN 800-50 pumping units

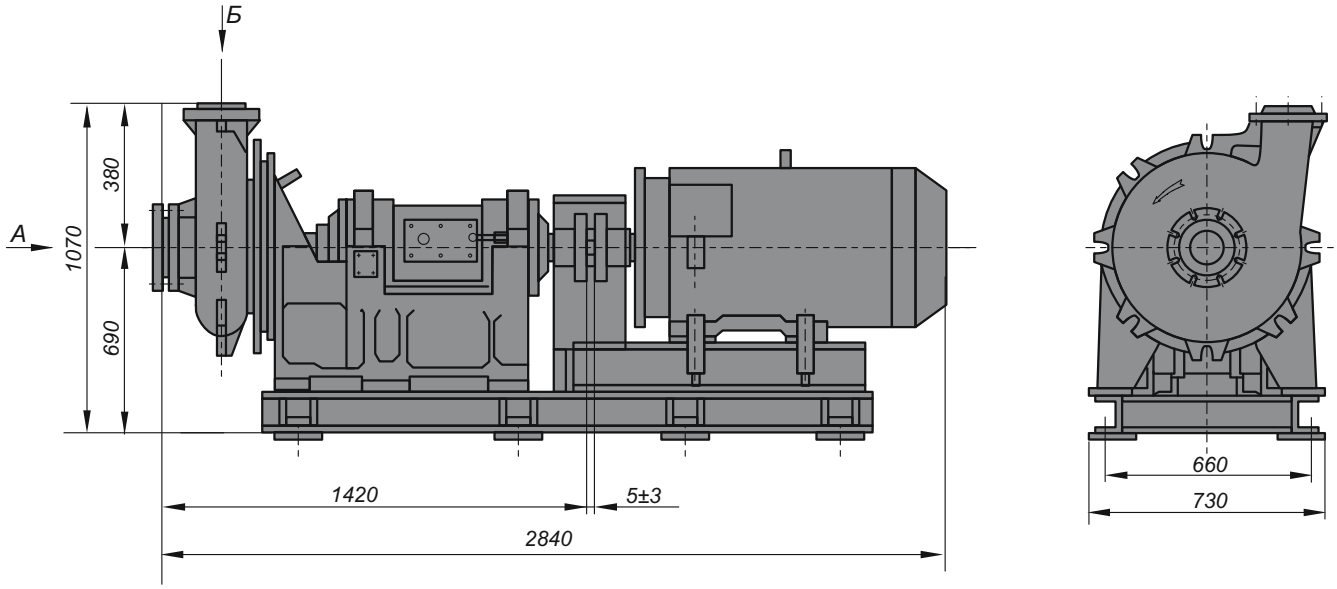

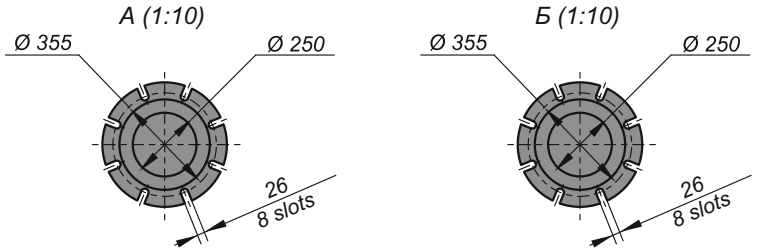

Performances and curves of CPN 800-50 pumping units at the rotational speed n=1480 rpm with water of density ρ = 998 kg/m³

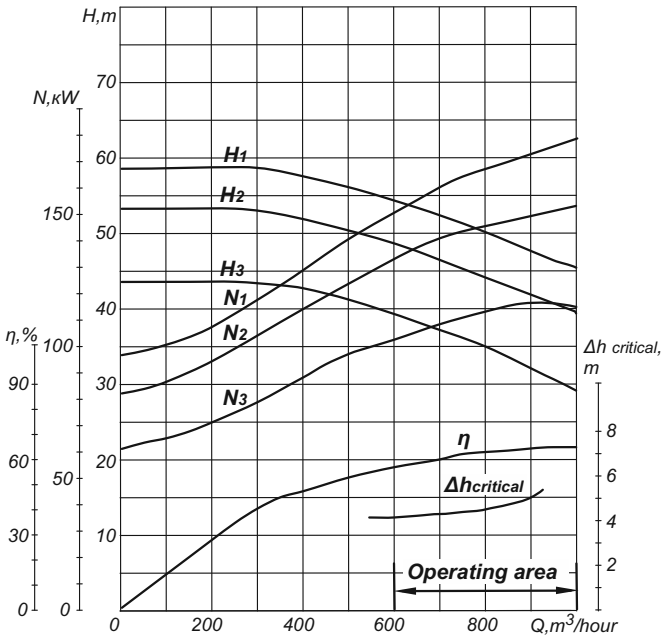

1 - for D2=427 mm 2 - for D2=408 mm 3 - for D2=370 mm

Vertical Centrifugal Sludge Pumps

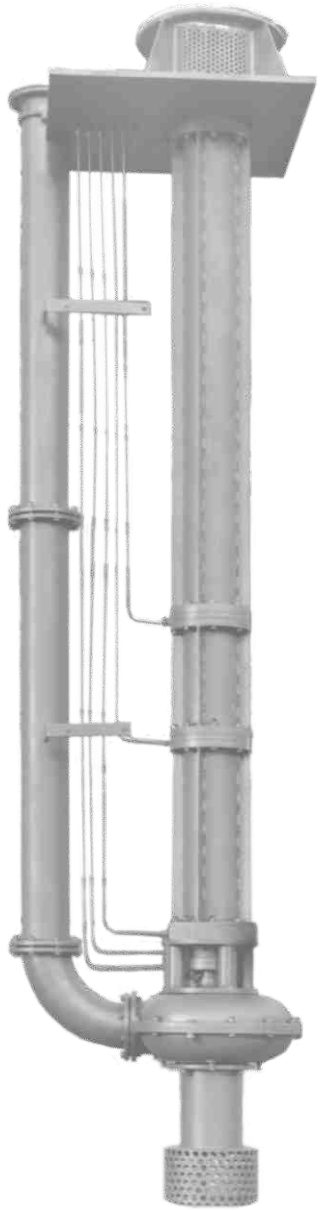

Designed for pumping of slightly aggressive and neutral liquids containing solid impurities of different concentration and dimensions. Hydrogen index of pumping medium pH 6-11.

Pumps may be applied for pumping of products of rocks processing, ash, slag, ferrous and nonferrous metal ores tails, argillo-arenaceous rocks, grained sands, sand and gravel rocks, gravel and spoiling rocks and household sewage.

Pumps CVP 225-60 and pumping units on their basis are designed for pumping of abrasive hydraulic fluids.

Units are manufactured in climatic version UKhL (for areas with temperate and cold climate), placement category 4 according to GOST 15150-69.

Pump NShB 550-45 is centrifugal, vertical, single stage, double-casing with armoured inner casing, outboard rolling bearings. These pumps are designed for pumping of industrial wastes containing scale and slag.

Design features:

- centrifugal pumps of single stage, one-casing, cradle-mounted type;
- pump inner flowing part consists of pump casing, armor-plated disk, impeller made of cast iron modified by nickel and chrome to improve wear-resisting properties;
- rolling bearings are used in pump bearing unit; bearing unit is highly unified and can be provided with heat exchanger for cooling of oil during pump operation in conditions exceeding operating pumping range;
- pump is driven through flexible pin coupling;
- it is provided for hydro seal of stuffing box seal.

Application: ferrous and nonferrous industry, coal and metal mining industry, melioration and irrigation and industrial and public water supply.

Technical Data

Designation	Capacity, m^3/hour	Head, m	Rotational speed (synchr.), rpm	Motor power, kW	Pump overall dimensions, mm	Pump weight, kg
CVP 225-60	225	60	1500	110	1375 x 1040 x 4545	2400
NShB 550-45	500-550	45	1500	160	5615 x 1320 x 1150	2040
NShB 550-45a	500-550	35	1500	160	5615 x 1320 x 1150	2040

The example of pump designation

"Pump CVP 225-60",
"Pumping unit CVP 225-60",
where CVP - centrifugal vertical submerged pump;
225 - capacity, m^3/hour;
60 - head, m.

"Pump NShB 550-45",
where NShB- sludge armoured pump;
550 - capacity, m^3/hour;
45 - head, m.

The Company improves the pumping equipment and equips pumping units with the motors of different manufactures. Thereby when ordering, please specify overall and mounting dimensions and required parameters according to the recommended form of Data Sheet.

CVP 225-60 Vertical Centrifugal Sludge Pumps

Dimensional drawing of CVP 225-60 pump

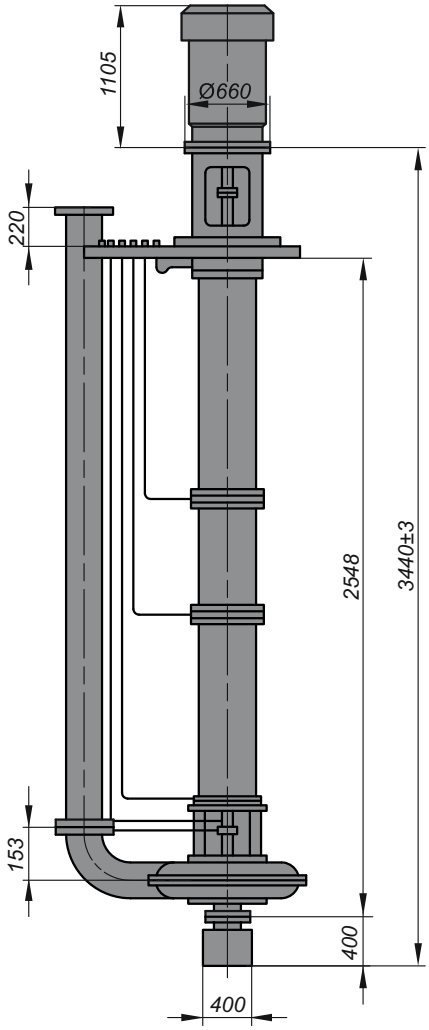

Pumped media temperature, °C	5 ... 70
Density, kg/m^3, not more	1300
pH index	6 ... 12
Power (at ρ = 998,2 kg/m^3), kW:	
- pump	54.5
- pumping unit	60
Efficiency (at ρ = 998,2 kg/m^3), %:	
- pump	64
- pumping unit	58
NPSH, m, not more	6,3
Volume concentration of mechanical impurities, %	30
Solid particles size, mm, not more	6
Microhardness of particles, MPa, not more	1100

Performances and curves of CVP 225-60 pump at the rotational speed n=24,2 s^{-1} (1450 rpm) with water of density ρ=998,2 kg/m^3

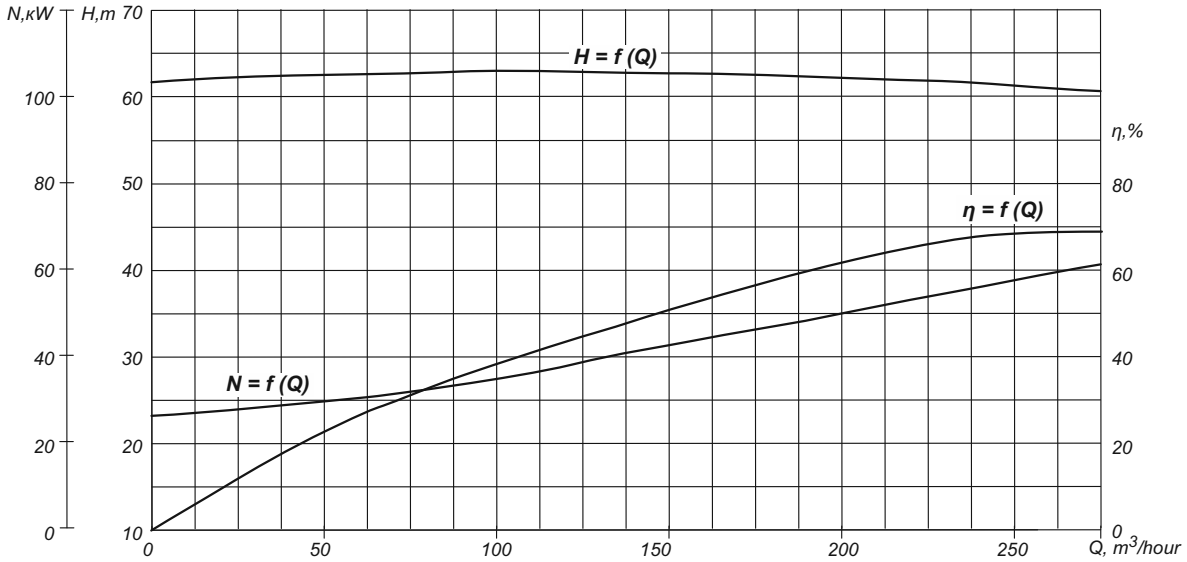

NShB 550-45 Vertical Centrifugal Sludge Pumps

Dimensional drawing of NShB 550-45 pump

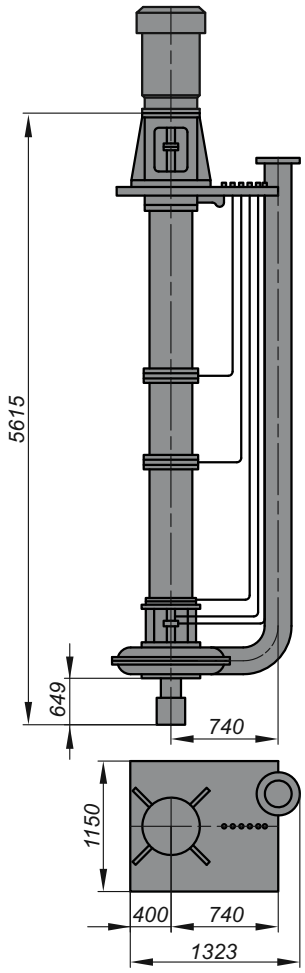

Pumped media temperature, °C	10-40
Concentration of slag-containing impurities, mg/l	2000
Consumed power, kW	130
Efficiency of pumping unit, %	50
Engine 4A315S4У3:	version 1M 3081
Voltage, V	380
Power, kW	160

Performances and curves of NShB 550-45 pump at the rotational speed n=1500 rpm with water of density ρ=998 kg/m^3

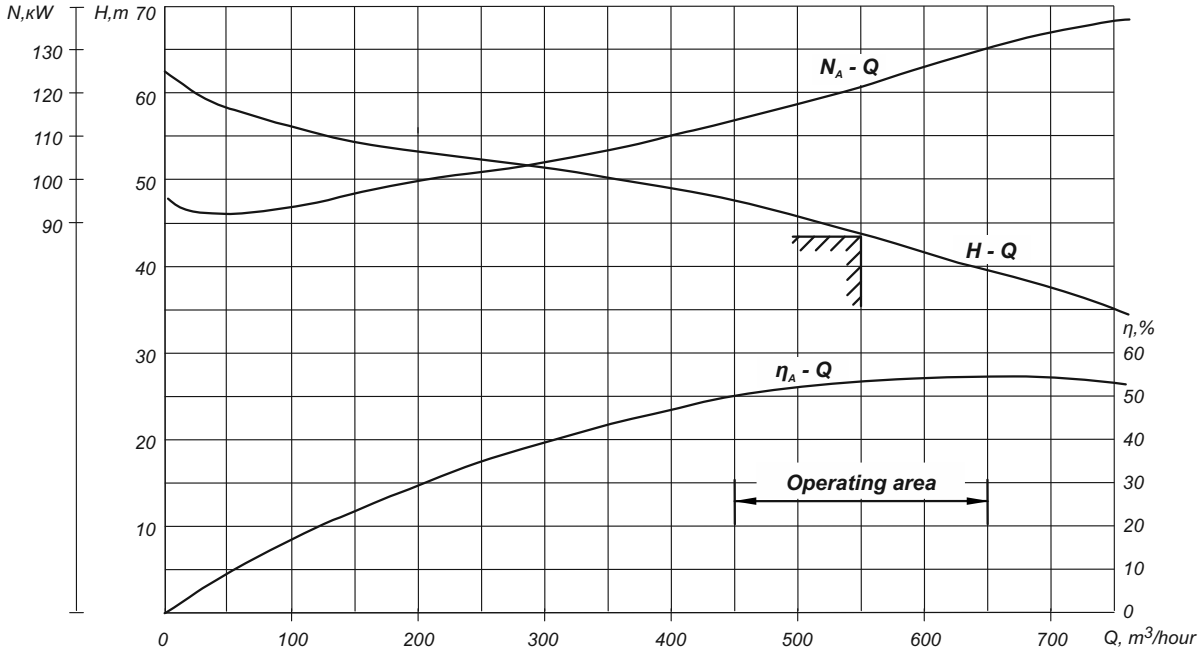

CNS 120-, 180-, 240- Centrifugal Multistage Pumps

CNS 120-..., 180-..., 240-... Centrifugal Multistage Pumps are manufactured in two modifications:

- with removable rotor bearing assemblies for lubrication of which it is necessary to supply oil (pump version “2”);
- with built-in hard-alloyed bearings operating on pumping medium (pump version “3”).

Pumps conform to the requirements of standard API 610.

Inner flowing part of pumps is made of:

- steel 20X13;
- steel 12X18H12M3T (modification “M”).

Centrifugal Multistage Pumps are completed with seals:

- mechanical ones - “T”;
- gland ones - “S”.

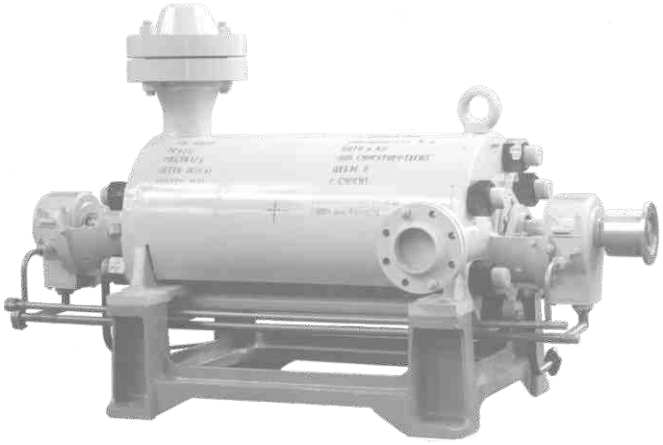

Centrifugal Multistage Pumps of CNS type pump version “2” are designed for pumping of pure water and oil field water without hydrogen sulfide into oil-bearing formations.

Pumps of version “2M” are designed for pumping of aggressive oil field water, including water containing hydrogen sulfide, into oil bearing formations.

Drive is performed by synchronous or asynchronous electric motors with power from 500 to 2000 kW.

Pumps are equipped with automatic system providing protection and alarm for critical parameters.

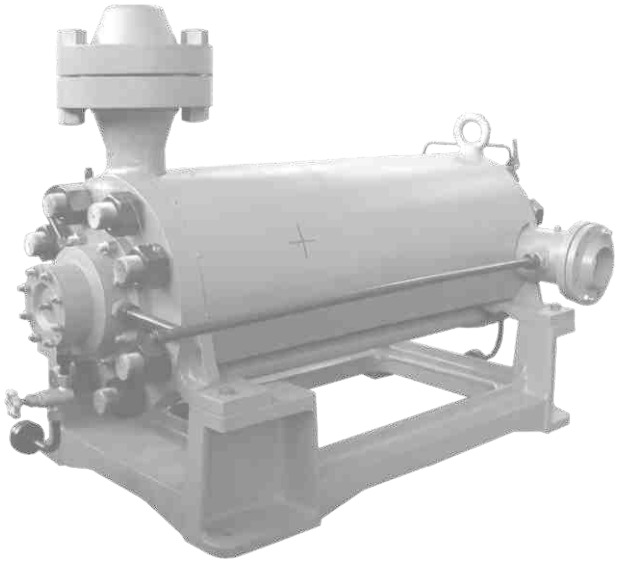

Pumps of CNS type pump version “3M” are designed for pumping of aggressive oil field water including water containing hydrogen sulfide into oil bearing formations.

Drive is performed by synchronous or asynchronous electric motors with power from 600 to 1600 kW.

Pumps are equipped with automatic system providing protection and alarm for critical parameters.

The example of designation for pump ordering

“Pump CNS 240-1900-2T TU U3Yu19-05747991-012-95”,

where CNS - centrifugal multistage pump;
240 - capacity, m^3/hour;
1900 - head, m;
2 - serial number of modification;
T - mechanical seal in pump design.

“Pump CNS 240-1900-2S-M TU 26-06-1438-85”,

where CNS - centrifugal multistage pump (unit);
240 - capacity, m^3/hour;
1900 - head, m;
2 - serial number of modification;
S - gland seal in pump design;
M - pump for aggressive fluids.

The Company improves the pumping equipment and equips pumping units with the motors of different manufactures. Thereby when ordering, please specify overall and mounting dimensions and required parameters according to the recommended form of Data Sheet.

CNS 120-, 180-, 240- Centrifugal Multistage Pumps

Technical data

Designation	Specification	Temperature of pumped medium,°C	Rotational speed, s^{-1} (rpm)	Capacity, m^3/hour	Head, m	Power, kW, not more	Inlet pressure, MPa(kgf/cm^2)		Efficiency, %, not more	NPSH, m, not more	External leakage through the seal, m^3/hour, not more		Mechanical impurities content		Motor power, kW
							min	max			gland	end	per weight, %	per solid particles size, mm	
CNS 120-...-2...															
CNS 120-1900-2...	TU U3.19-05747991-012-95 (TU 26-06-1438-85)*	0 … 45 (0 … 80)*	50 (3000)	120	1900	913	0.1 (1.0)	3.1 (31.0)	68	7	$5\cdot10^{-3}$	$5\cdot10^{-4}$	0.1	0.1 (0.2)*	500 … 1250
CNS 120-1775-2...					1775	853									
CNS 120-1650-2...					1650	793									
CNS 120-1525-2...					1525	733									
CNS 120-1422-2...					1422	684									
CNS 120-1275-2...					1275	613									
CNS 120-1150-2...					1150	553									
CNS 120-1050-2...					1050	505									
CNS 180-...-2...															
CNS 180-1900-2...	TU U3.19-05747991-012-95 (TU 26-06-1438-85)*	0 … 45 (0 … 80)*	50 (3000)	180	1900	1226	0.1 (1.0)	3.1 (31.0)	76	7	$5\cdot10^{-3}$	$5\cdot10^{-4}$	0.1	0.1 (0.2)*	800 … 1600
CNS 180-1775-2...					1775	1145									
CNS 180-1650-2...					1650	1064									
CNS 180-1525-2...					1525	984									
CNS 180-1422-2...					1422	917									
CNS 180-1275-2...					1275	822									
CNS 180-1150-2...					1150	842									
CNS 180-1050-2...					1050	677									
CNS 240-...-2...															
CNS 240-1900-2...	TU U3.19-05747991-012-95 (TU 26-06-1438-85)*	0 … 45 (0 … 80)*	50 (3000)	240	1900	1592	0.1 (1.0)	3.1 (31.0)	78	7	$5\cdot10^{-3}$	$5\cdot10^{-4}$	0.1	0.1 (0.2)*	1000 … 2000
CNS 240-1775-2...					1775	1487									
CNS 240-1650-2...					1650	1383									
CNS 240-1525-2...					1525	1278									
CNS 240-1422-2...					1422	1192									
CNS 240-1275-2...					1275	1068									
CNS 240-1150-2...					1150	964									
CNS 240-1050-2...					1050	880									
CNS 120-...-3T-M															
CNS 120-1900-3T-M	TU 26-06-1438-85	0 … 80	50 (3000)	120	1900	913	0.1 (1.0)	3.1 (31.0)	68	7	-	$5\cdot10^{-4}$	0.1	0.2	600 … 1250
CNS 120-1775-3T-M					1775	853									
CNS 120-1650-3T-M					1650	793									
CNS 120-1525-3T-M					1525	733									
CNS 120-1422-3T-M					1422	684									
CNS 120-1275-3T-M					1275	613									
CNS 120-1150-3T-M					1150	553									
CNS 120-1050-3T-M					1050	505									
CNS 180-...-3T-M															
CNS 180-1900-3T-M	TU 26-06-1438-85	0 … 80	50 (3000)	180	1900	1249	0.1 (1.0)	3.1 (31.0)	76	7	-	$5\cdot10^{-4}$	0.1	0.2	800 … 1600
CNS 180-1422-3T-M					1422	929									
CNS 180-1050-3T-M					1050	686									
CNS 240-...-3T-M															
CNS 240-1900-3T-M	TU 26-06-1438-85	0 … 80	50 (3000)	240	1900	1552	0.1 (1.0)	3.1 (31.0)	78	7	-	$5\cdot10^{-4}$	0.1	0.2	1000 … 2000
CNS 240-1750-3T-M					1750	1475									
CNS 240-1422-3T-M					1422	1192									
CNS 240-1050-3T-M					1050	880									

* values in brackets are shown for corrosion resistant version of pump (“M”)

CNS 120-, 180-, 240- Centrifugal Multistage Pumps

Dimensional drawing
of CNS 120-...-2-…, CNS 180-...-2-…, CNS 240-...-2-… pumps

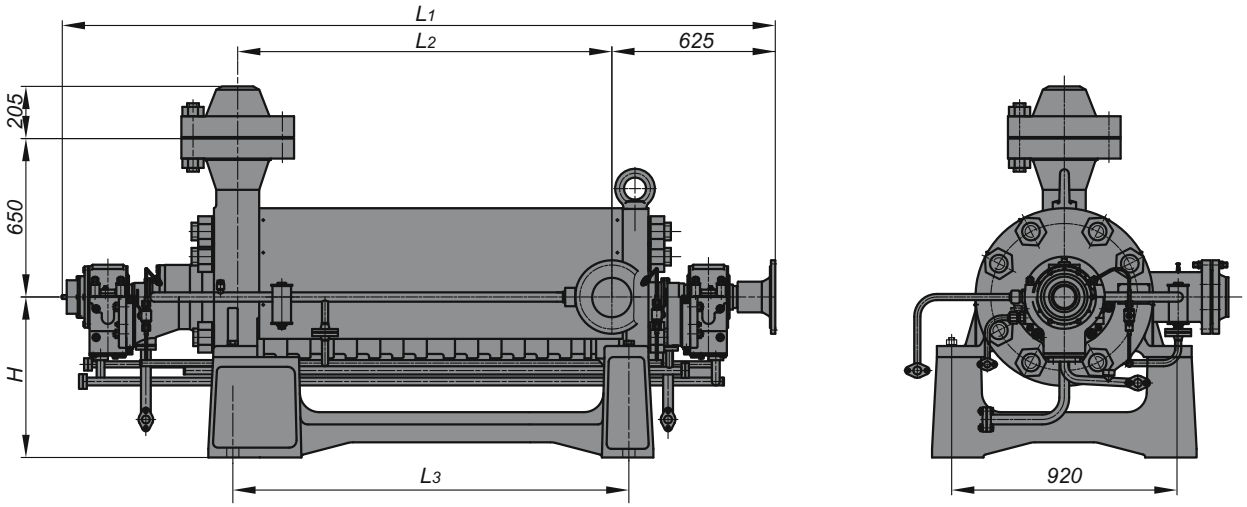

Inlet nozzle

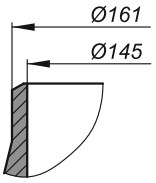

Outlet nozzle

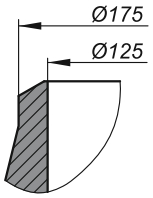

Main dimensions (mm) and weight of pumps version “2”

Pump designation	Number of stages	*L1*	*L2*	*L3*	*H*	Pump weight, kg
CNS 120-...-2...						
CNS 120-1900-2...	15	2910	1567	1617	655	3800
CNS 120-1775-2...	14	2815	1472	1617	655	3630
CNS 120-1650-2...	13	2720	1377	1617	655	3450
CNS 120-1525-2...	12	2625	1282	1237	655	3280
CNS 120-1422-2...	11	2530	1187	1237	655	3100
CNS 120-1275-2...	10	2435	1092	1237	655	2900
CNS 120-1150-2...	9	2340	997	952	565	2700
CNS 120-1050-2...	8	2245	902	952	565	2500
CNS 180-...-2...						
CNS 180-1900-2...	15	2910	1567	1617	655	3790
CNS 180-1775-2...	14	2815	1472	1617	655	3680
CNS 180-1650-2...	13	2720	1377	1617	655	3550
CNS 180-1525-2...	12	2625	1282	1237	655	3410
CNS 180-1422-2...	11	2530	1187	1237	655	3150
CNS 180-1275-2...	10	2435	1092	1237	655	3030
CNS 180-1150-2...	9	2340	997	952	565	2900
CNS 180-1050-2...	8	2245	902	952	565	2690
CNS 240-...-2...						
CNS 240-1900-2...	15	2910	1567	1617	655	3810
CNS 240-1775-2...	14	2815	1472	1617	655	3690
CNS 240-1650-2...	13	2720	1377	1617	655	3570
CNS 240-1525-2...	12	2625	1282	1237	655	3420
CNS 240-1422-2...	11	2530	1187	1237	655	3170
CNS 240-1275-2...	10	2435	1092	1237	655	3050
CNS 240-1150-2...	9	2340	997	952	565	2910
CNS 240-1050-2...	8	2245	902	952	565	2700

CNS 120-, 180-, 240- Centrifugal Multistage Pumps

Dimensional drawing
of CNS 120-...-3M, CNS 180-...-3T, CNS 240-...-3T-M pumps

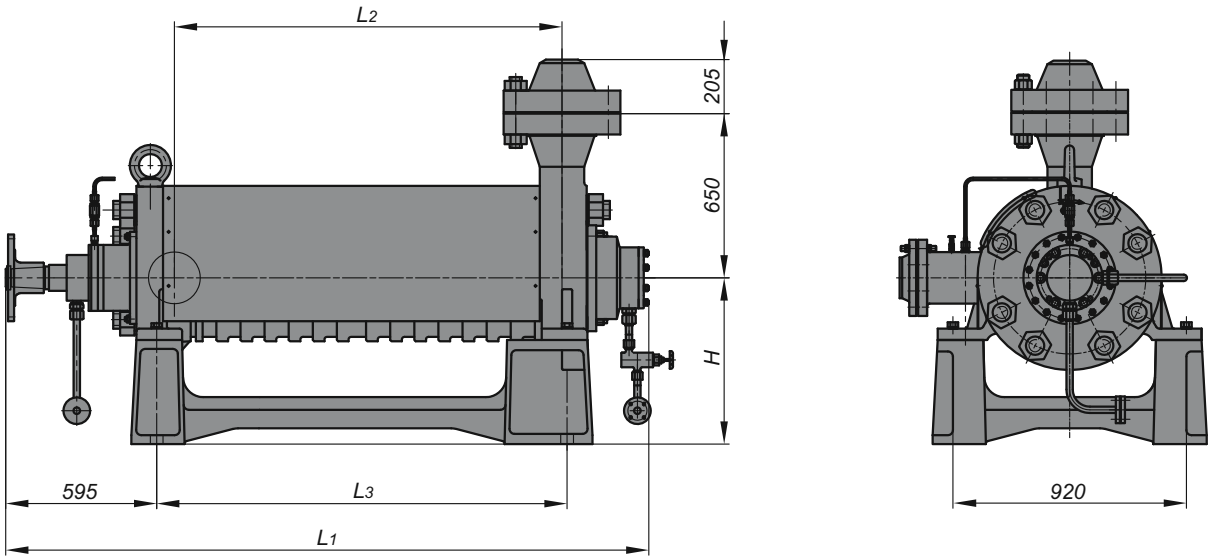

Inlet nozzle

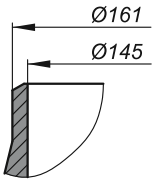

Outlet nozzle

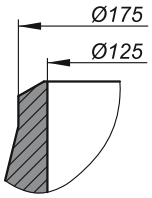

Main dimensions (mm) and weight of pumps version “3M”

Pump designation	Number of stages	*L1*	*L2*	*L3*	*H*	Pump weight, kg
CNS 120-...-3T-M						
CNS 120-1900-3T-M	15	2530	1567	1617	655	3690
CNS 120-1775-3T-M	14	2435	1472	1617	655	3580
CNS 120-1650-3T-M	13	2340	1377	1617	655	3460
CNS 120-1525-3T-M	12	2245	1282	1237	655	3310
CNS 120-1422-3T-M	11	2150	1187	1237	655	3050
CNS 120-1275-3T-M	10	2055	1092	1237	655	2925
CNS 120-1150-3T-M	9	1960	997	952	565	2790
CNS 120-1050-3T-M	8	1865	902	952	565	2580
CNS 180-...-3T-M						
CNS 180-1900-3T-M	15	2530	1567	1617	655	3700
CNS 180-1422-3T-M	11	2150	1187	1237	655	2840
CNS 180-1050-3T-M	8	1865	902	952	565	2200
CNS 240-...-3T-M						
CNS 240-1900-3T-M	15	2530	1567	1617	655	3700
CNS 240-1750-3T-M	15	2530	1567	1617	655	3700
CNS 240-1650-3T-M	13	2340	1377	1617	655	3460
CNS 240-1050-31-M	8	1865	902	952	565	2200

CNS 120-, 180-, 240- Centrifugal Multistage Pumps

Performances and curves of CNS 120-... pumps

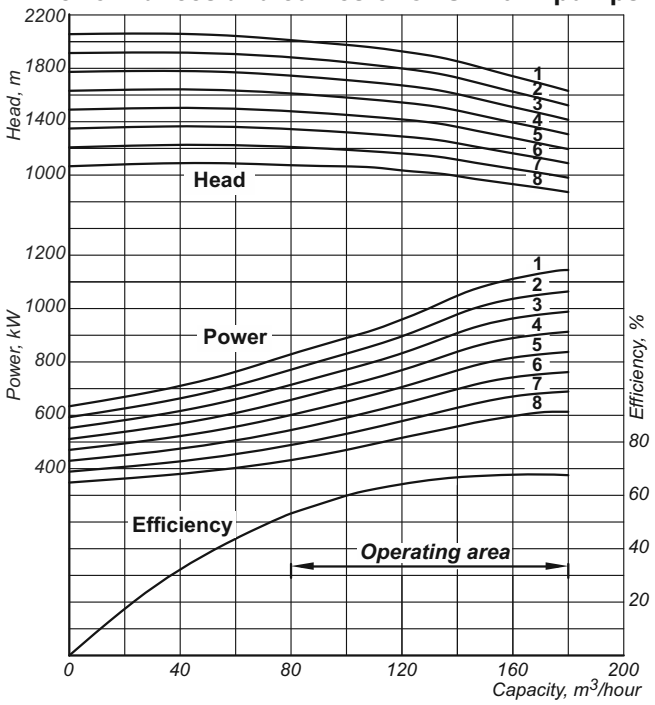

1 - CNS 120-1900-... (i=15)
2 - CNS 120-1775-... (i=14)
3 - CNS 120-1650-... (i=13)
4 - CNS 120-1525-... (i=12)
5 - CNS 120-1422-... (i=11)
6 - CNS 120-1275-... (i=10)
7 - CNS 120-1150-... (i=9)
8 - CNS 120-1050-... (i=8)

where i – number of pump stages

Performances and curves of CNS 180-... pumps

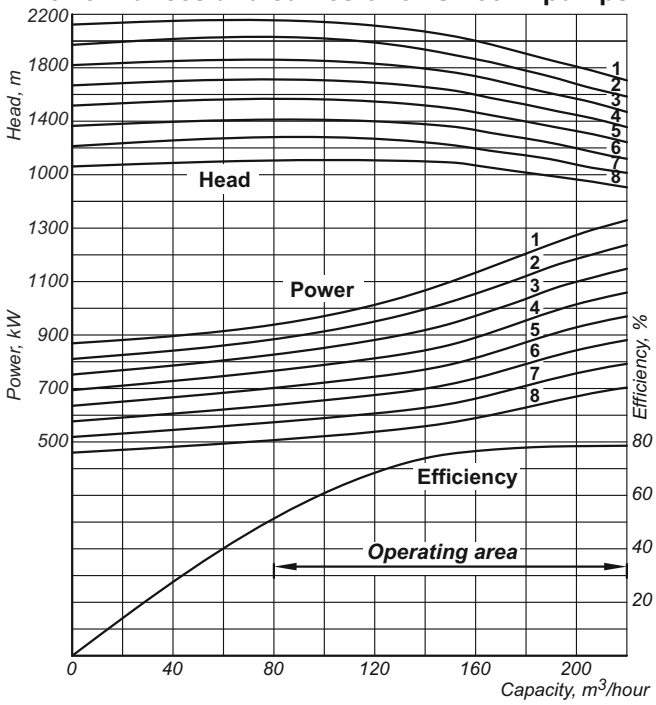

1 - CNS 180-1900-... (i=15)
2 - CNS 180-1775-... (i=14)
3 - CNS 180-1650-... (i=13)
4 - CNS 180-1525-... (i=12)
5 - CNS 180-1422-... (i=11)
6 - CNS 180-1275-... (i=10)
7 - CNS 180-1150-... (i=9)
8 - CNS 180-1050-... (i=8)

where i – number of pump stages

Performances and curves of CNS 240-... pumps

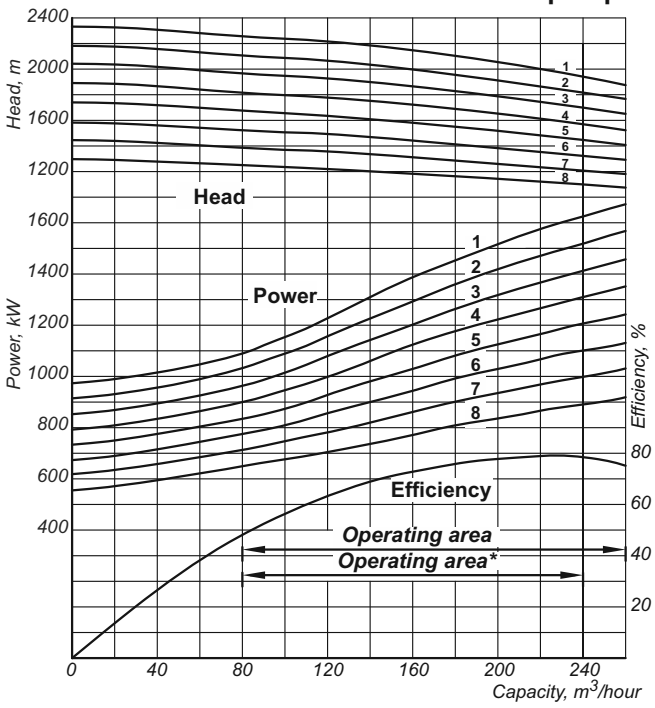

** For pumps CNS 240-1900 with electric motor power N=1600kW*

1 - CNS 240-1900-... (i=15)
2 - CNS 240-1775-... (i=14)
3 - CNS 240-1650-... (i=13)
4 - CNS 240-1525-... (i=12)
5 - CNS 240-1422-... (i=11)
6 - CNS 240-1275-... (i=10)
7 - CNS 240-1150-... (i=9)
8 - CNS 240-1050-... (i=8)

where i – number of pump stages

Directions and results of modernization

1. Improvement of pump rotor bundle for the purpose of gain in economic efficiency, expansion of operating head area, reduction of pump vibration activity.
2. Application of mechanical seals, conforming to API 682 requirements, with introduction of flushing system for products of erosion, corrosion and other suspended particles, or gland seals made of up-to-date packing material "Graphlex".
3. Application of flexible plate coupling instead of gear-type coupling intended for reduction of vibration activity, reduction of axial motor rotor displacement, reduction of fire hazard due to non-availability of oil for lubrication, etc.
4. Gain in life of interstage impellers seals.
5. Installation of axial displacement meter for providing the pump protection against drastic destruction in case of axial rotor displacement due to wear of parts and hydraulic discharging device.
6. Optimization of hydraulic discharging device design intended for reliability improvement and achievement of acceptable leakage level through it.
7. Introduction of protection against overflows in the area of impeller seating on the shaft to prevent the washing of the latter or collection of products of erosion, corrosion and other suspended particles in this area.
8. Improved maintainability, reduced repair cycles, increased time between overhauls.

CNS 120-, 180-, 240- Centrifugal Multistage Pumps
Lube System

Lube system to pump CNS, comprising of oil cooler and oil tank BM-0.32, together with motor-pump and gear pump unit, is intended for providing the lubrication delivery to CNS pump bearings.

Oil tank BM-0,32

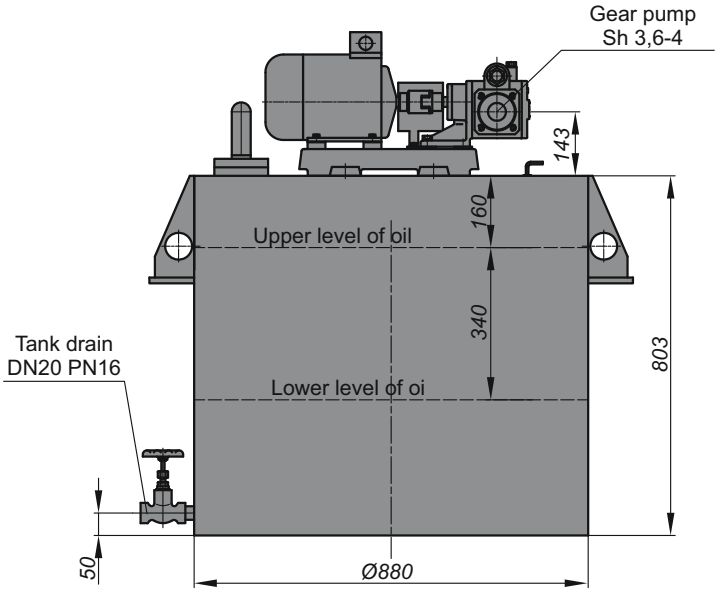

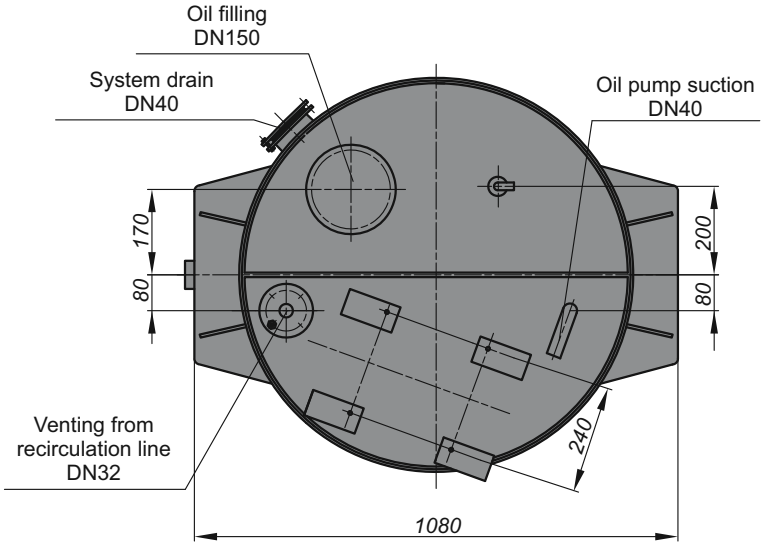

Gear pump Sh 3,6-4

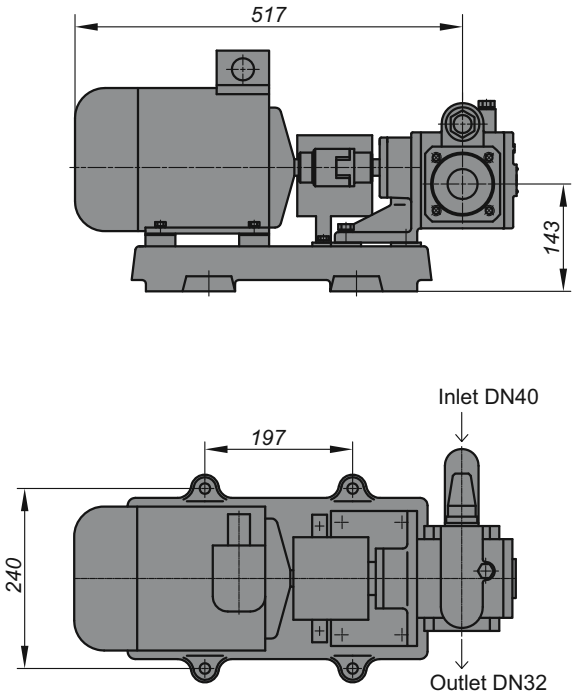

Capacity, m^3/hour	3.6
Pump pressure, kgf/cm^2	4
Pump power, kW	1.1
Rotational speed, rpm (s^{-1})	1450 (24)
Allowable vacuum gage suction lift, m	5

Materials of main parts: СЧ 20, steel 20, 35, 38ХМЮА, bronze Бр.05Ц5С5

Tank volume, m^3	minimum	0.32
	maximum	0.36
Материал основных деталей:		carbon steel, steel 20K

CNS 120-, 180-, 240- Centrifugal Multistage Pumps
Lube System

Oil cooler

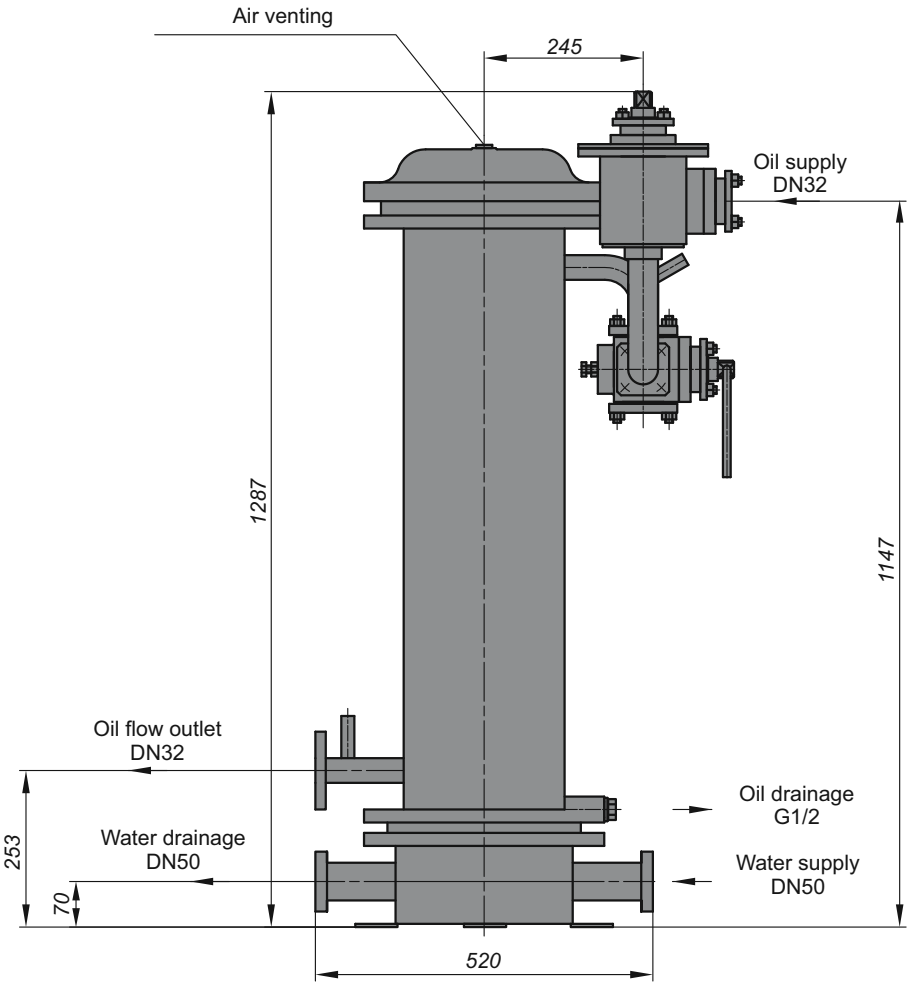

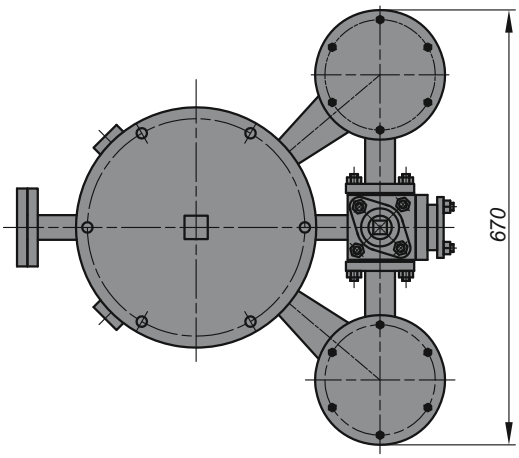

Material of main parts: **steel 20**

CNS 120-, 180-, 240- Centrifugal Multistage Pumps
Automation Equipment System (AES)

AES is intended for unit control according to algorithm selected, for monitoring of its parameters, protection against emergency operation conditions and providing an operator with information on parameters status and operation modes.

AES may be applied for control of pump units of analogous types, used for maintaining reservoir pressure in oil production wells as a part of cluster pump stations.

AES adaptation to type of equipment controlled is behind the software and is implemented on site from the operator panel.

Protection and control board

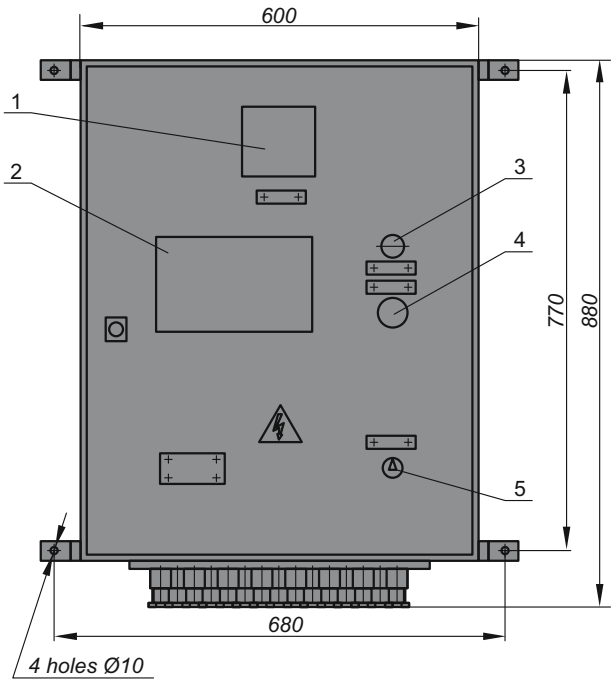

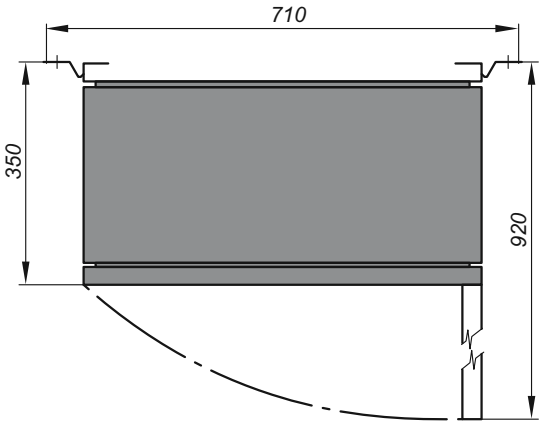

1 - Ammeter
2 - Operator panel
3 - Voltage supply lamp
4 - Emergency shutdown button
5 - Line circuit breaker

AES is able to ensure the control functions performance from upper level system , without permanent control by operating personnel.

With regard to stability to the effects of environmental temperature and humidity the AES version corresponds to Group D4 as per GOST 12997-84 (operating temperature under service is ranging from 5 to 50°C and upper value of relative humidity is 85% at 35°C).

With regard to stability to effects of sinusoidal vibrations the AES corresponds to Group L1 as per GOST 12997-84.

AES is designed for service outside the explosion- hazardous premises.

Regarding protection against environmental effects the AES corresponds to protection class IP54 as per GOST 14254-80.

AES receives the following inputs:

- analogous inputs of resistance temperature detectors of TSM type - 16 pcs.
- discrete (two-position) inputs of direct current - 15 pcs.
  - Level of logic "0", V - 0.5
  - Level of logic "1", V - 19 ... 30

AES delivers the following outputs:

- discrete outputs, 1A, 220 V - 8 pcs.
- discrete outputs, 25A, 380 V, 50Hz (3-phase) - 3 pcs.

AES has a radial serial interface available and ensures data exchange in standard industrial networks (Unitel-Way, FipWay, AS-1, Fipio, Sacva-date, etc.)

Minimum allowable electric resistance of AES circuits isolation regarding casing and between each other shall be, at least, 10 MOm.

Technical Data

AES power supply is three-phase AC voltage 380 V, frequency 50 Hz. Electronic components and units power supply is one-phase voltage 380 V, frequency 50 Hz.

Overall dimensions, mm, not more:
- control board - 800x600x350
- gage post - 154x650x360

Weight, kg, not more:
- control board - 52.76
- gage post - 24.7

Power consumption of control circuits at rated voltage of supply dc mains, kW, not more - 0.1

Product components:

- Protection and control board;
- Gage post;
- Junction box;
- Head-switch sensor DN-2.5 with terminal block;
- Stop-Start Console PKE 722-2 UKhL 1/2" Spec. TU 16-642.006-83;
- 2 Resistance temperature detectors TSM -1388.5 C2.822.034-6 Spec. TU 25-7363.032-89;
- 2 Resistance temperature detectors TSM -1088.5 C2.822.026 Spec. TU 25-7363.032-89.

CNS 120-, 180-, 240- Centrifugal Multistage Pumps
Automation Equipment System (AES)

Gage post

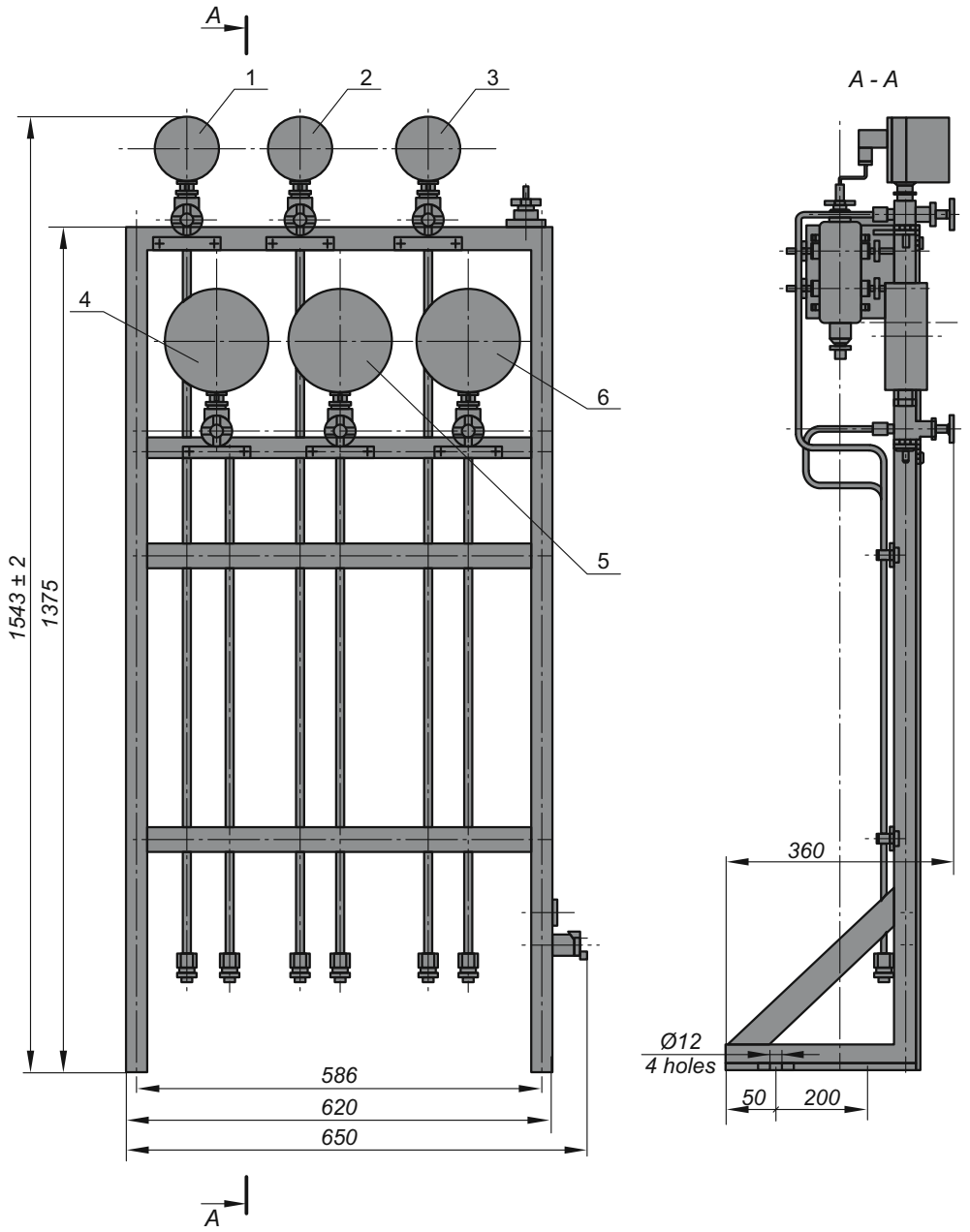

1 - Pump outlet
2 - Line end oil
3 - Pump inlet
4 - Oil pump outlet
5 - Cooling water
6 - Hydraulic discharging device

AES provides the following functions:

- Unit control in such operation modes as: - manual;
  - automatic;
  - remote.
- Delivery of audible and light warning and emergency alarms, at achieving set values of parameters with indication of description, time of entering and time of acknowledgement with further storing in alarm history files. Period of file information storing is unlimited.
- Delivery of audible and light alarms under malfunction of mechanisms with indication of its description.
- Emergency shutdown of pump unit under all operation conditions.
- Viewing of current parameters values.
- Delivery of information on operational progress of preparation to startup, operation, shutdown of pump unit.
- Status indication of acting mechanisms.
- Constant measurement of motor current by indicating pointer-type instrument.
- Timing of pump unit operation .
- Representation of information on status and malfunctions of controller modules.
- Power supply control of power circuits and control wiring circuits.

CNS 40-, 80-, 200- Centrifugal Multistage Mine Pumps

Pumps and electric pumping units of CNS type with the capacity of 40, 80, 200 m^3/hour and head from 90 to 425 m are designed for pumping of pure and contaminated water with the following properties:

- PH index is from 6.5 to 8.5;
- total concentration of sulphate and chloride is up to 20 g/l;
- temperature to 70°C;
- solids contents to 1.5% as per weight;
- solids size is not more than 1 mm;
- micro-hardness is not more than 1.47 GPa.

Units are manufactured in climatic version UKhL (for areas with temperate and cold climate), placement category 4 according to GOST 15150.

Technical data

Designation	Temperature of pumped medium,°C	Rotational speed, s^{-1} (rpm)	Capacity, m^3/sec (m^3/hour)	Head, m	Power, kW, not more	Inlet pressure, MPa (kgf/cm^2)	Efficiency, %, not more	NPSH, m, not more	External leakage through the seal, m^3/hour (l/hour), not more	Mechanical impurities content		Motor power, kW
										per weight, %	per solid particles size, mm	
CNS 40-...												
CNS 40-120	1 … 70	24.6	0.0111	120	24	0.1-0.6	55	3	$13.9 \cdot 10^{-6}$	1.5	1	22
CNS 40-180		(1480)	(40)	180	36	(1.0-6.0)			(50)			30
CNS 40-240				240	59							45
CNS 40-300				300	60							55
CNS 40-330				330	65							75
CNS 80-...												
CNS 80-120	1 … 70	24.6	0.0222	120	45	0.1-0.6	70	3	$13.9 \cdot 10^{-6}$	1.5	1	75
CNS 80-180		(1480)	(80)	180	75	(1.0-6.0)			(50)			75
CNS 80-240				240	91							90
CNS 80-300				300	110							110
CNS 80-330				330	130							132
CNS 200-...												
CNS 200-90	1 … 70	24.6	0.056	90	90	0.1-0.6	70	3	$13.9 \cdot 10^{-6}$	0.5	0.2	110
CNS 200-170		(1480)	(200)	170	124	(1.0-6.0)			(50)			200
CNS 200-212				212	155							250
CNS 200-255				255	186							250
CNS 200-297				297	217							315
CNS 200-340				340	248							400
CNS 200-382				382	279							400
CNS 200-425				425	310							400

The example of pump designation

"Pump CNS-40-240",

where CNS - centrifugal multistage pump;
40 (80, 200) - capacity, m^3/hour;
240 - head, m.

The Company improves the pumping equipment and equips pumping units with the motors of different manufactures. Thereby when ordering, please specify overall and mounting dimensions and required parameters according to the recommended form of Data Sheet.

Delivery scope

- pump;
- frame;
- guards
- coupling;
- motor.

Material of main components

- base components - СЧ20 (steel 25Л - CNS 200)
- inner flowing part - steel 20Х13
- shaft - steel 45ХПМА (40ХФА)
- coupling - СЧ20 - CNS 200

CNS 40-, 80- Centrifugal Multistage Mine Pumps

Dimensional drawing of CNS 40-, 80- pumps

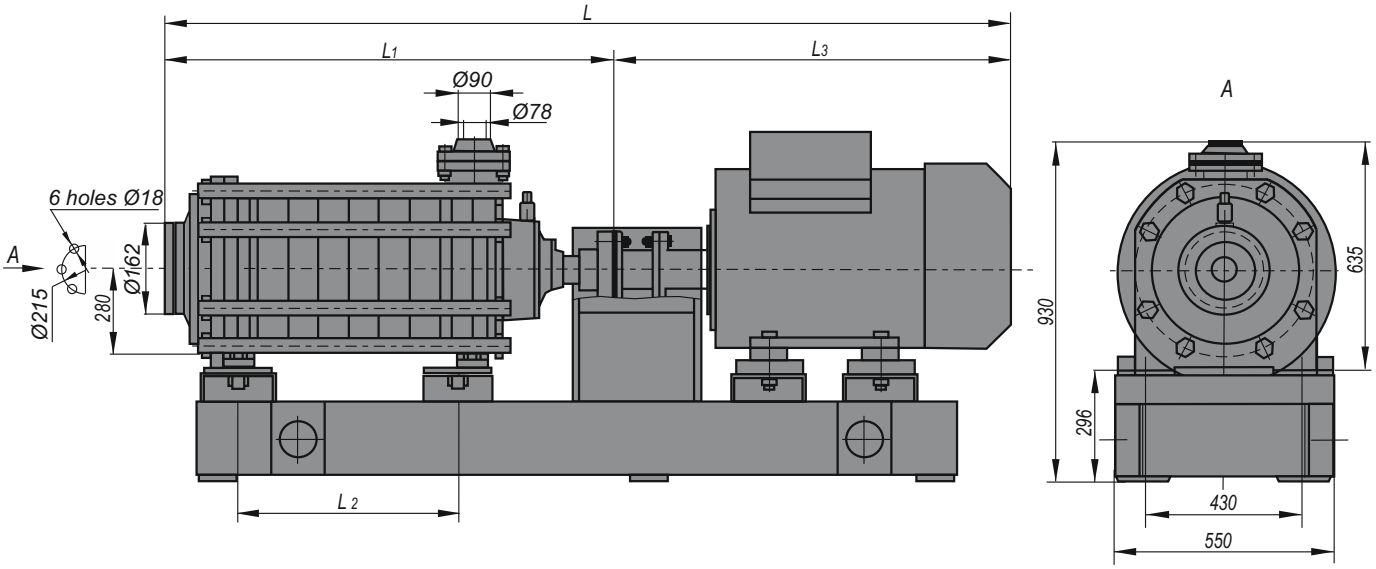

Overall dimensions and weight

Designation	Dimensions, mm				Weight, not more, kg	
	L	L1	L2	L3	pump	unit
CNS 40-330	2634	1564	860	1070	750	1430
CNS 40-300	2432	1420	775	1012	685	1380
CNS 40-240	2142	1252	607	890	570	1210
CNS 40-180	1939	1084	439	855	460	984
CNS 40-120	1831	916	271	915	340	840

Designation	Dimensions, mm				Weight, not more, kg	
	L	L1	L2	L3	pump	unit
CNS 80-330	3055	1564	860	1550	750	1940
CNS 80-300	2970	1420	775	1550	685	1890
CNS 80-240	2700	1252	607	1450	570	1595
CNS 80-180	2465	1084	439	1680	460	1295
CNS 80-120	2245	916	271	1330	340	1105

Performances and curves of pumps

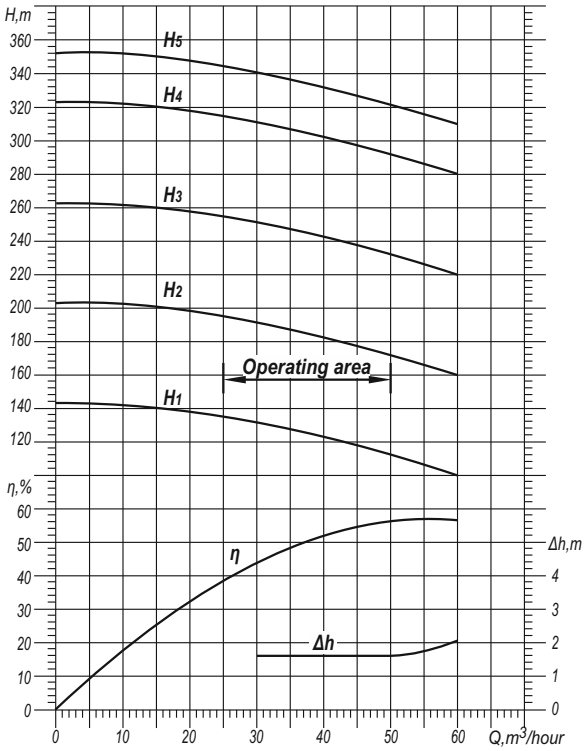

1 - CNS 40-120
2 - CNS 40-180
3 - CNS 40-240
4 - CNS 40-300
5 - CNS 40-330

n_c=1500 rpm

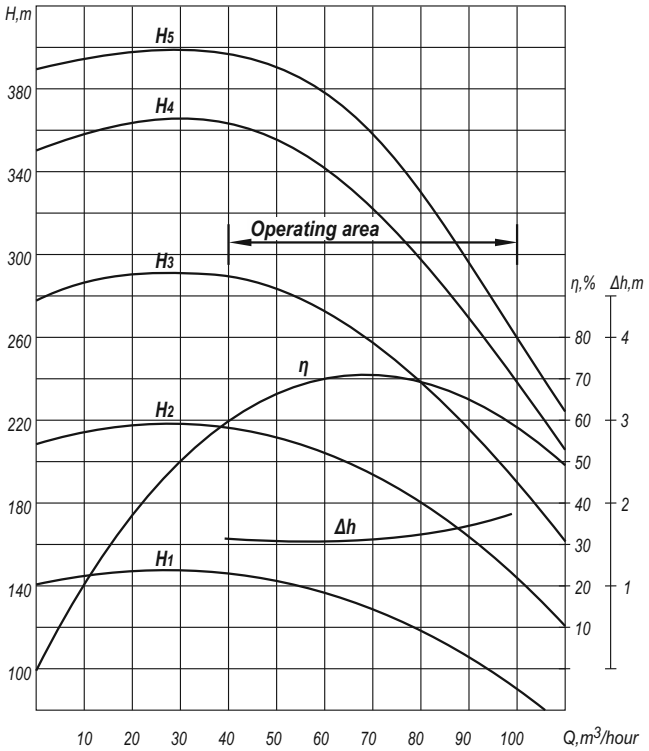

1 - CNS 80-120
2 - CNS 80-180
3 - CNS 80-240
4 - CNS 80-300
5 - CNS 80-330

n_c=1500 rpm

CNS 200- Centrifugal Multistage Mine Pumps

Dimensional drawing of CNS 200- pumps

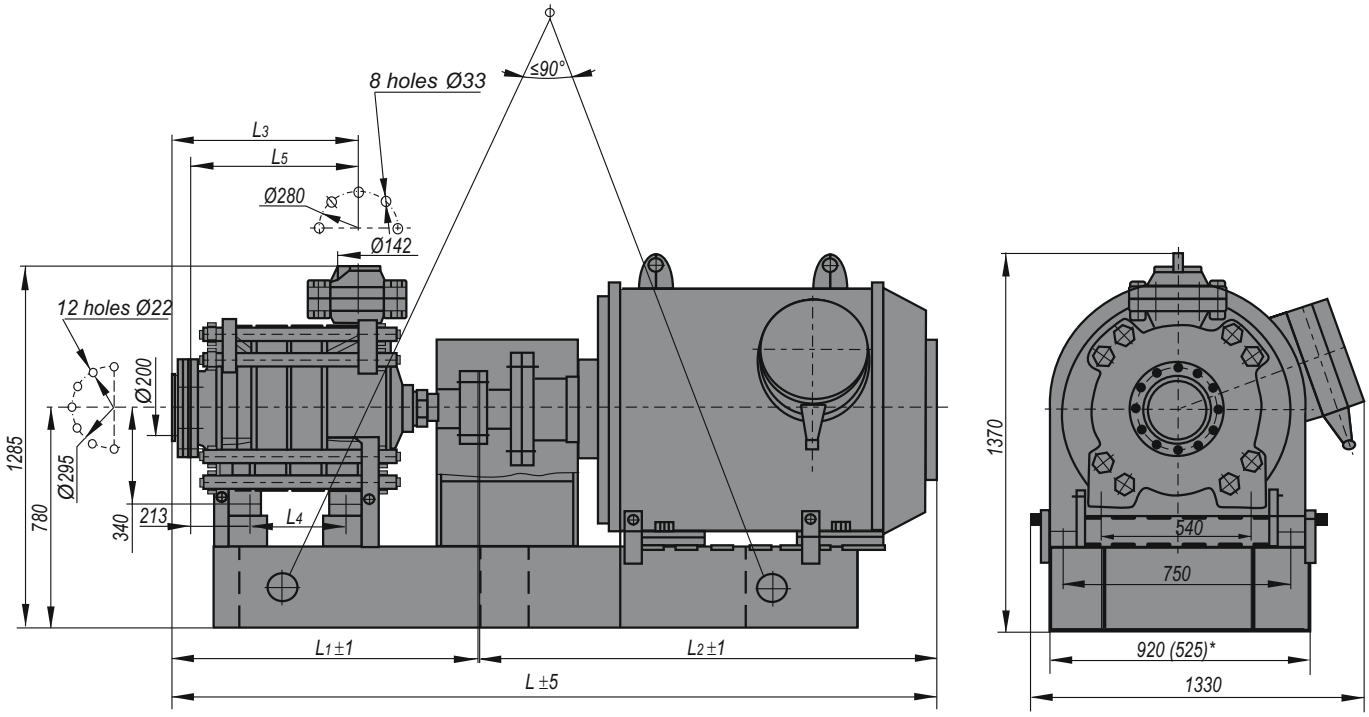

* for CNS 200-90

Overall dimensions and weight

Designation	Dimensions, mm						Weight, not more, kg	
	L	L1	L2	L3	L4	L5	pump	unit
CNS 200-90	2200	950	-	531	200	-	1080	1980
CNS 200-170	2745	1072	1665	578	325	520	1220	3500
CNS 200-212	2929	1196	1722	703	450	645	1430	4020
CNS 200-255	3055	1322	1925	828	575	770	1630	4230
CNS 200-297	3374	1446	1920	953	700	895	1830	4790
CNS 200-340	3555	1572	1975	1078	825	1020	2030	5360
CNS 200-382	3679	1696	1975	1203	950	1145	2240	5570
CNS 200-425	3805	1822	1975	1328	1075	1270	2440	5780

Performances and curves of pumps

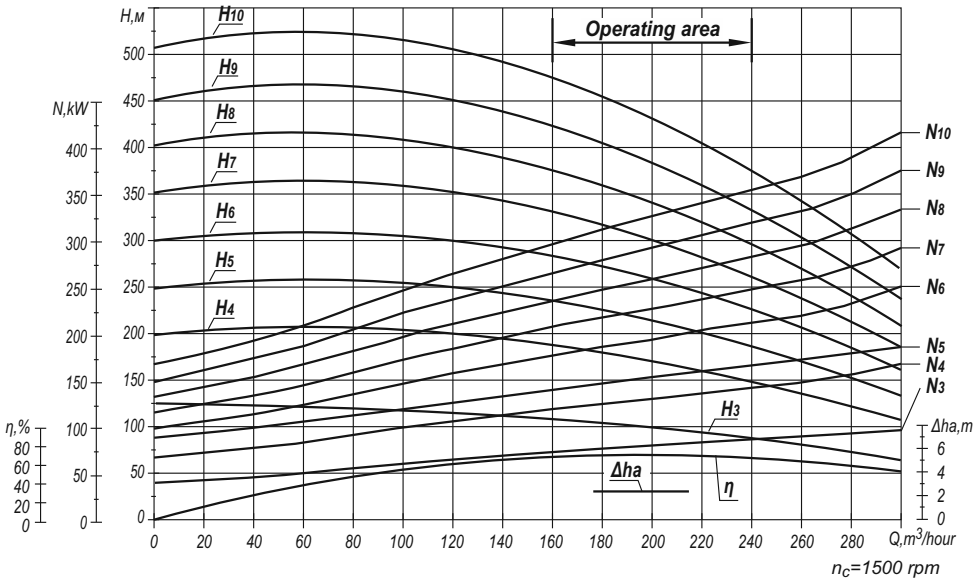

3 - CNS 200-90 (i=3)
4 - CNS 200-170 (i=4)
5 - CNS 200-212 (i=5)
6 - CNS 200-255 (i=6)
7 - CNS 200-297 (i=7)
8 - CNS 200-340 (i=8)
9 - CNS 200-382 (i=9)
10 - CNS 200-425 (i=10)

where i – number of pump stages

NSSh 410- Centrifugal Multistage Mine Pumps

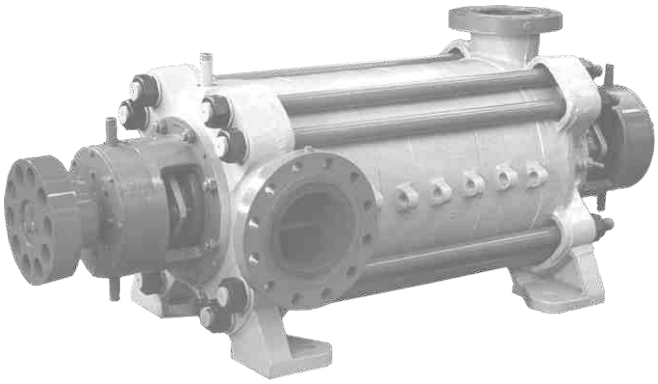

Centrifugal multistage mine pumps of NSSh 410 type are designed for pumping chemically low active and neutral low-impure fluids at water-drainage installations with fluid influx of 250-410 m^3/h and elevation head of water lifting being equal to head in the nominal mode (taking into account the resistance of pipeline network).

Application: water-drainage installations of coal and iron-ore mines, mining and smelting enterprises, oil-producing and oil-refining industry, feed water supply, etc.

Horizontal multistage pumps with impellers being installed in single direction and hydraulic balancing device to sustain axial forces.

Physical and chemical performances of pumped medium

Temperature, K (°C), not more	318 (45)
Solid impurities maximum size, mm, not more	0.2
Content of mechanical impurities, kg/m^3, not more	5
pH index	6.5...8.5
Total concentration of sulfates and chlorides, g/l, not more	20
Microhardness of solid impurities, GPa, not more	1.47

Technical data (in nominal mode)

Designation	Capacity, m^3/sec (m^3/hour)	Head, m	Rotational speed, s^{-1} (rpm)	Recommended motor power, kW	NPSH, m, not more	Pump efficiency, %, not less
NSSh 410-182	410 (0.1139)	182	24.6 (1475)	315	4	72
NSSh 410-273		273		500		
NSSh 410-364		364		630		
NSSh 410-455		455		800		
NSSh 410-546		546		1000		
NSSh 410-637		637		1250		
NSSh 410-728		728		1250		
NSSh 410-819		819		1600		
NSSh 410-910		910		1600		
NSShD 410-910		910		1600 (800x2)		

Note: 1. Allowable head deviation is +5%, -3% from nominal value.
2. Efficiency is a design value and shall not be considered as an acceptance one.

The example of designation

"Pump NSSh 410-910, ТУ УЗ. 19-05747991-085-98",
where NSSh - multistage mine pump;
410 - rated capacity, m^3/h;
182 - head, m.

"Pump NSShD 410-910, 1.3330-33.001.00 TU",
where NSShD - multistage mine dual-drive pump;
410 - rated capacity, m^3/h;
910 - head, m.

The Company improves the pumping equipment and equips pumping units with the motors of different manufactures. Thereby when ordering, please specify overall and mounting dimensions and required parameters according to the recommended form of Data Sheet.

Scope of supply

- pump of NSSh 410;
- coupling with guard (for NSShD 410-910-2 pcs.);
- set of spare parts;
- set of special tools and accessories.

Material of main parts

- inner flowing part - steel 20Х13Л GOST 977-88;
- shaft - steel 40ХФА GOST 4543-71;
- suction and discharge covers - steel 25Л-1 GOST 977-88.

NSSh 410- Centrifugal Multistage Mine Pumps

Dimensional drawing of NSSh 410- pumps

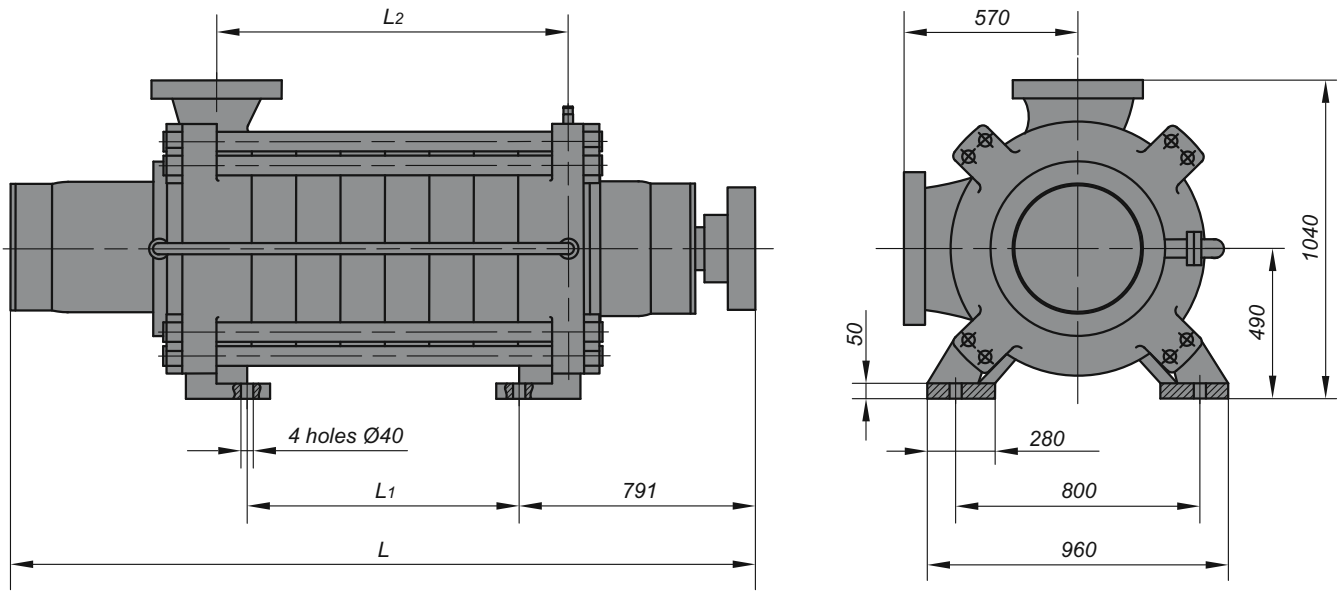

Dimensional drawing of NSShD 410-910 pump

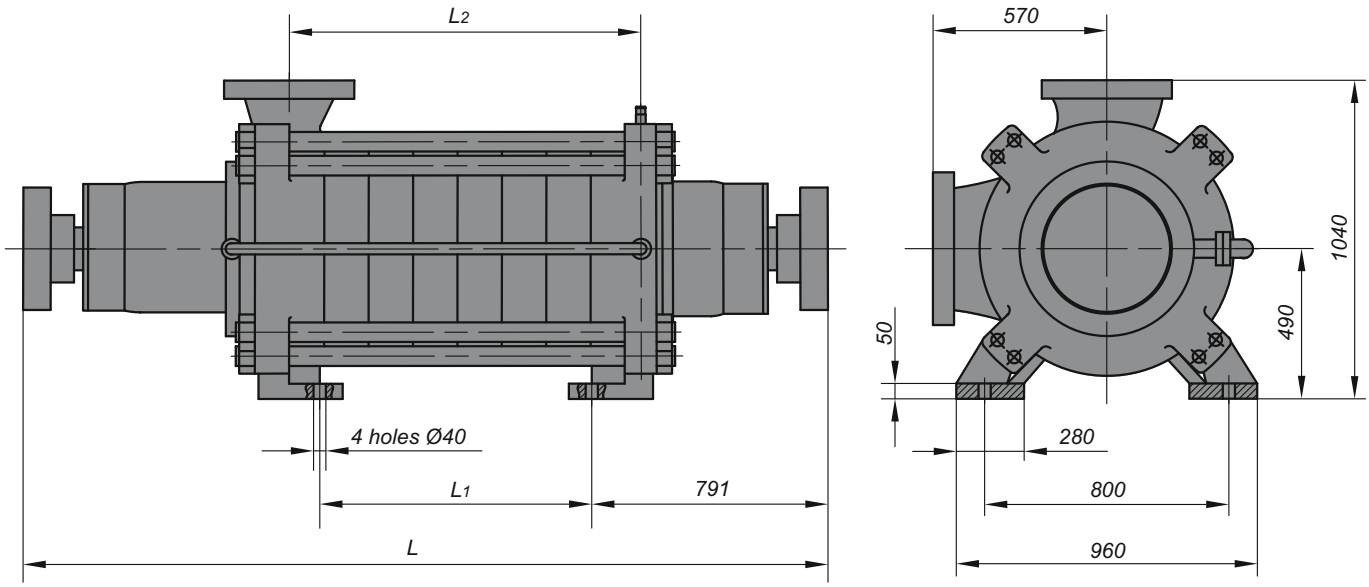

Overall and installation dimensions

Pump Designation	Dimensions, mm			Pump weight, kg
	L	*L1*	*L2*	
NSSh 410-182	1910	169	373	2470
NSSh 410-273	2055	314	518	2790
NSSh 410-364	2200	459	663	3110
NSSh 410-455	2345	604	808	3430
NSSh 410-546	2490	749	953	3780
NSSh 410-637	2635	894	1098	4130
NSSh 410-728	2780	1039	1243	4480
NSSh 410-819	2925	1184	1388	4830
NSSh 410-910	3070	1329	1533	5180
NSShD 410-910	3100	1329	1533	5210

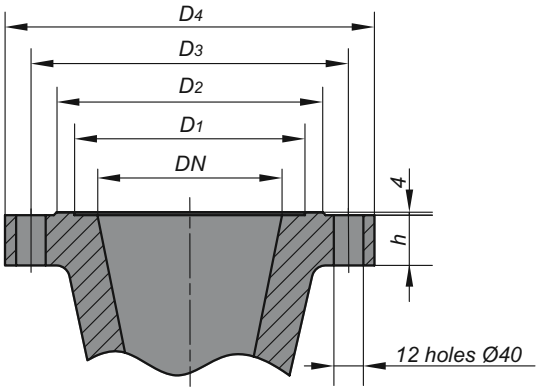

Connecting dimensions of pump nozzles

Dimensions, mm	Inlet nozzle	Outlet nozzle
DN	250	200
D1	313	255
D2	360	310
D3	430	360
D4	500	425
h	68	60

NSSh 410- Centrifugal Multistage Mine Pumps

Performance and curves of NSSh 410-364 pump at the rotational speed n=24.59 s^{-1} (1475 rpm) with water of density ρ=1000 kg/m^3

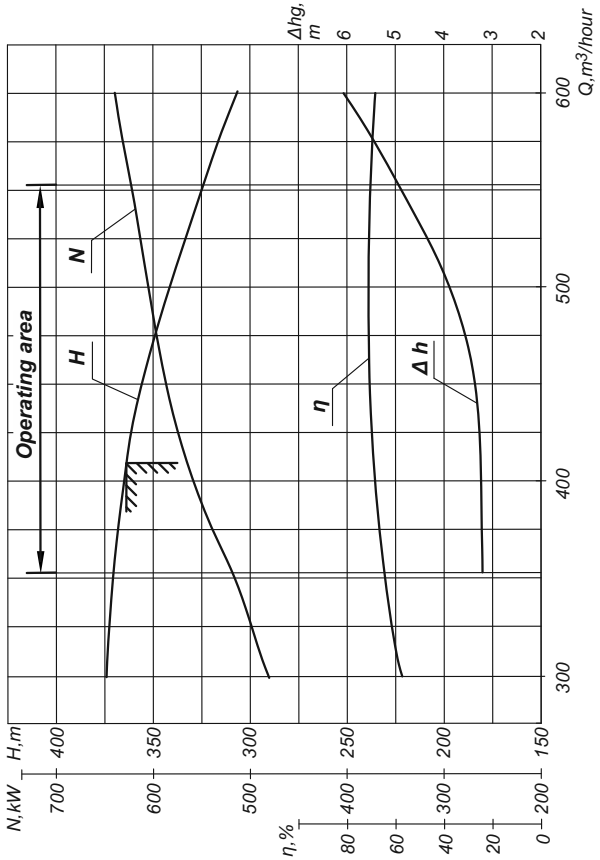

Performance and curves of NSSh 410-455 pump at the rotational speed n=24.59 s^{-1} (1475 rpm) with water of density ρ=1000 kg/m^3

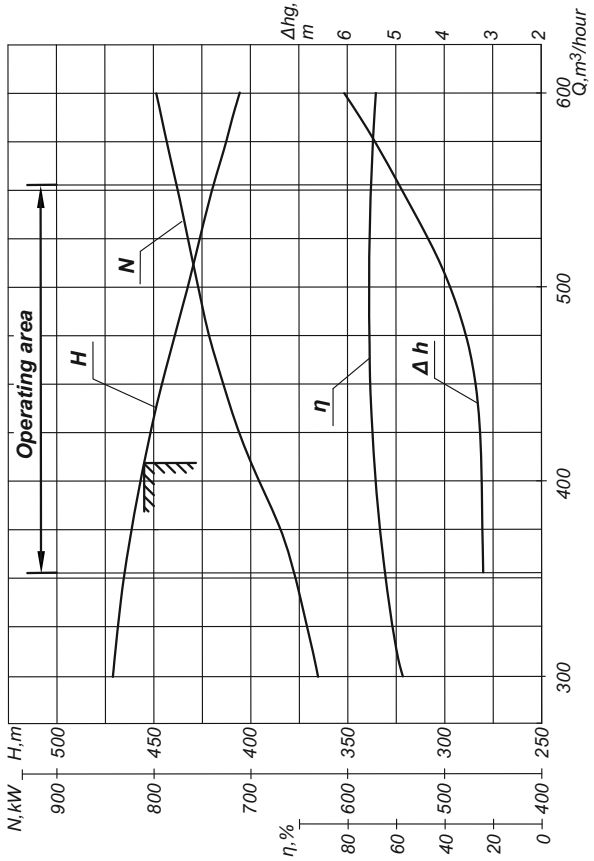

Performance and curves of NSSh 410-182 pump at the rotational speed n=24.59 s^{-1} (1475 rpm) with water of density ρ=1000 kg/m^3

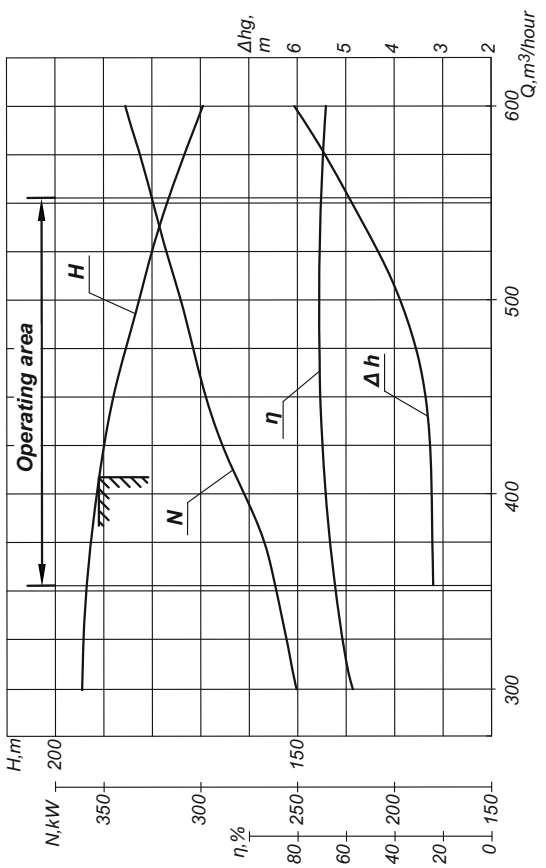

Performance and curves of NSSh 410-273 pump at the rotational speed n=24.59 s^{-1} (1475 rpm) with water of density ρ=1000 kg/m^3

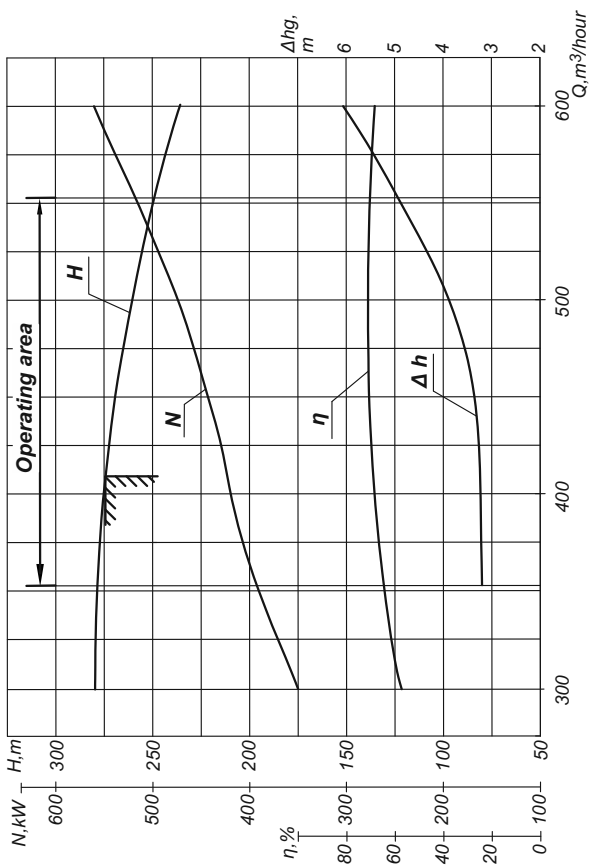

NSSh 410- Centrifugal Multistage Mine Pumps

Performance and curves of NSSh 410-546 pump at the rotational speed n=24.59 s^{-1} (1475 rpm) with water of density ρ=1000 kg/m^3

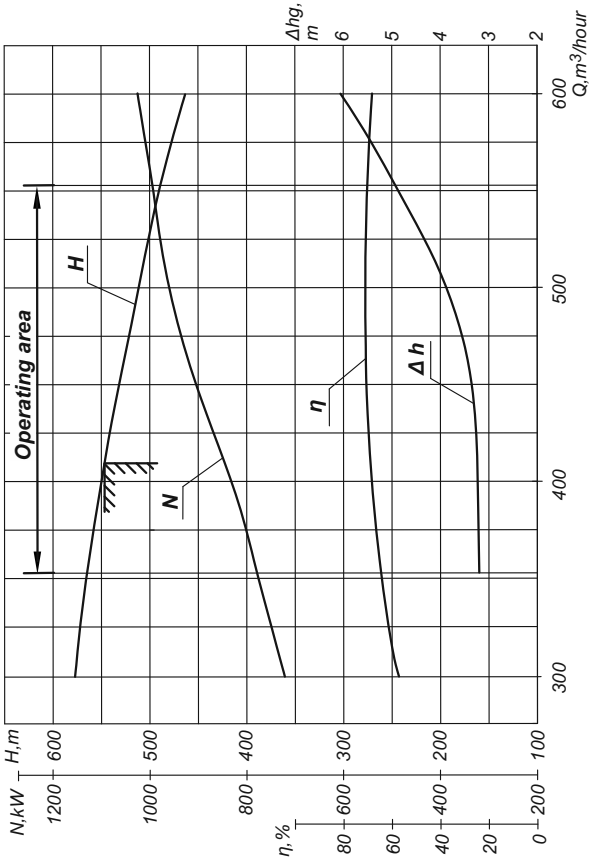

Performance and curves of NSSh 410-728 pump at the rotational speed n=24.59 s^{-1} (1475 rpm) with water of density ρ=1000 kg/m^3

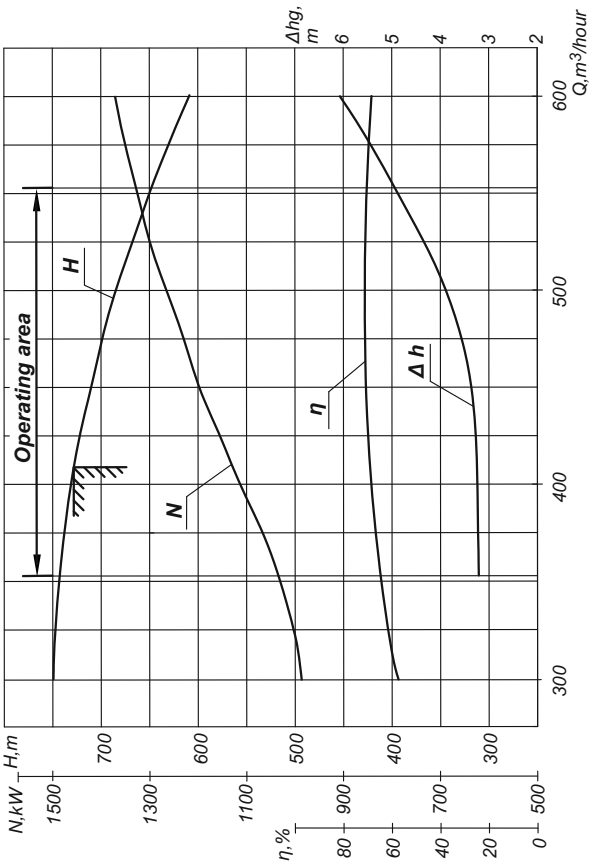

Performance and curves of NSSh 410-637 pump at the rotational speed n=24.59 s^{-1} (1475 rpm) with water of density ρ=1000 kg/m^3

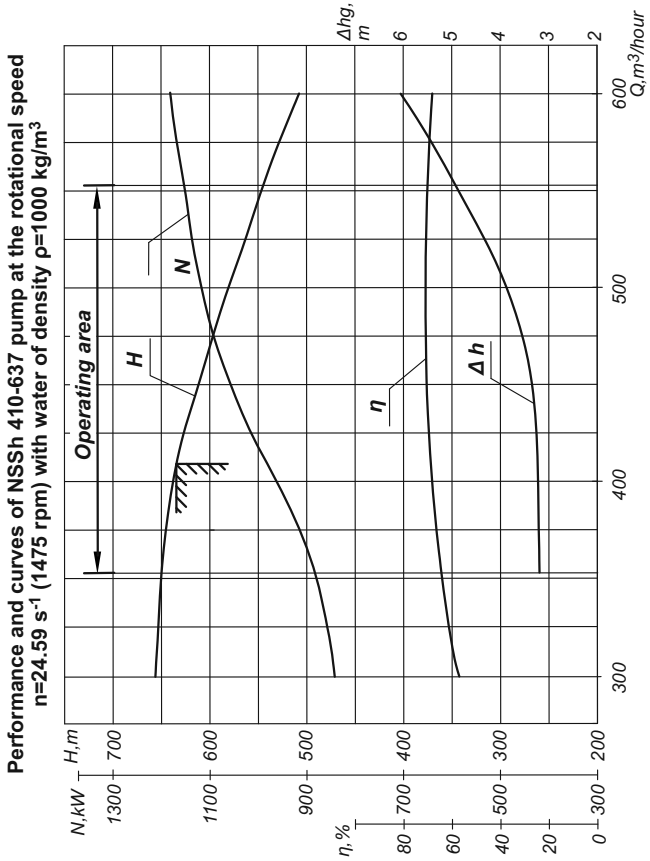

Performance and curves of NSSh 410-819 pump at the rotational speed n=24.59 s^{-1} (1475 rpm) with water of density ρ=1000 kg/m^3

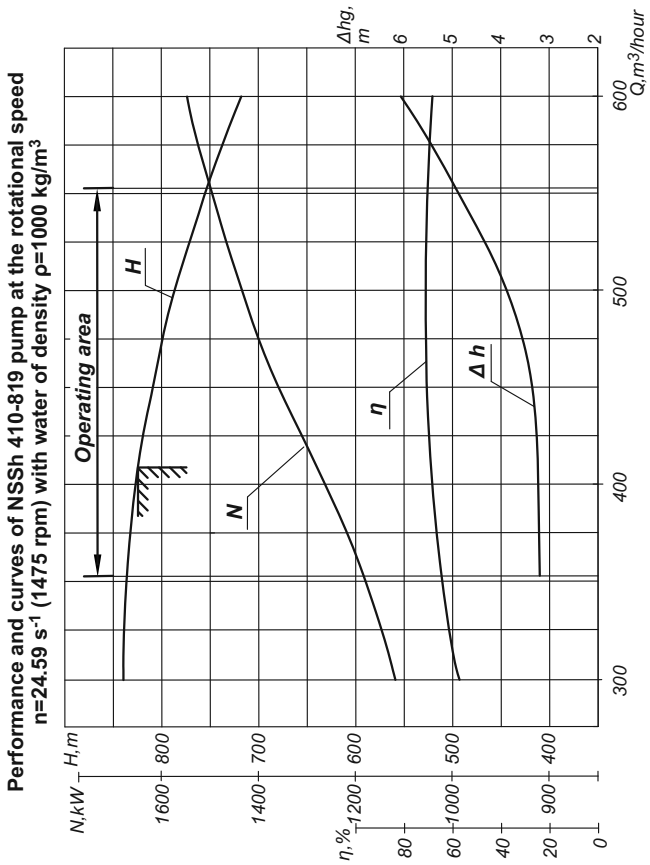

NSSh 410- Centrifugal Multistage Mine Pumps

Performance and curves of NSSh 410-910 pump at the rotational speed n=24.59 s^{-1} (1475 rpm) with water of density ρ=1000 kg/m^3

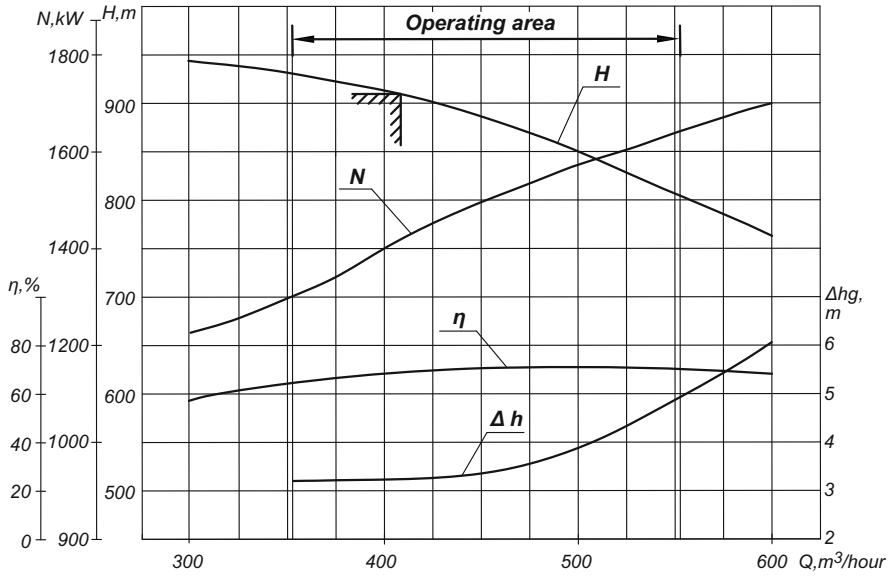

Performance and curves of NSShD 410-910 pump at the rotational speed n=24.59 s^{-1} (1475 rpm) with water of density ρ=1000 kg/m^3

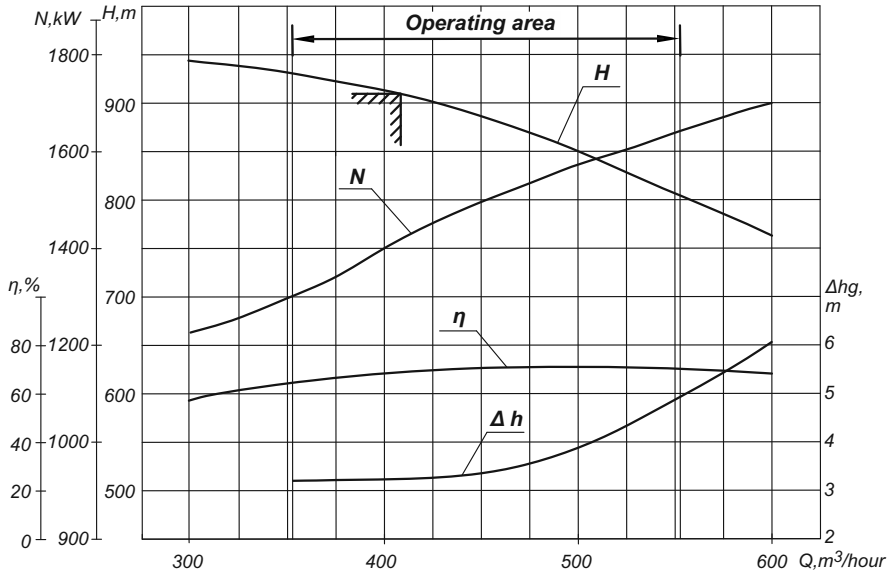

Due to continuous modernization of electric motors being delivered with pumps the motor identification mark as well as overall and installation dimensions of pump motor units are specified by Customer's individual requests.

NSSh 500-273У, NSSh 500-990 Centrifugal multistage mine pumps

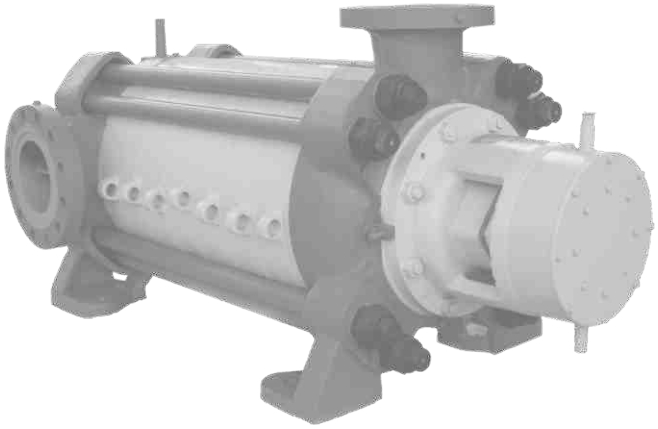

Centrifugal multistage mine pumps of NSSh 500 type are designed for pumping of chemically non-aggressive and neutral slightly contaminated fluids at dewatering plants with inflows 350-500 m^3/hour and elevation head of water corresponding to head at nominal conditions (taking into account pipeline network resistance).

Application: water-drainage installations of coal and iron-ore mines, mining and smelting enterprises, oil-producing and oil-refining industry, feed water supply, etc.

Horizontal multistage pumps with impellers being installed in single direction and hydraulic balancing device to sustain axial forces.

Physical and Chemical Performances of Pumped Medium

Temperature, K (°C), not more	318 (45)
Solid impurities maximum size, mm, not more	0.2
Content of mechanical impurities, kg/m^3, not more	5
pH index	6.5...8.5
Total concentration of sulfates and chlorides, g/l, not more	20
Microhardness of solid impurities, GPa, not more	1.47

Technical data (in nominal mode)

Designation	Capacity, m^3/sec (m^3/hour)	Head, m	Rotational speed, s^{-1} (rpm)	Recommended motor power, kW	NPSH, m, not more	Pump efficiency, %, not less	Weight, kg
NSSh 500-273У	500	273	24.6	630	4	72	2790
NSSh 500-990	(0.1389)	990	(1475)	2000			5207

Note:
1. Allowable head deviation is +5%, -3% from nominal value.
2. Efficiency is a design value and shall not be considered as an acceptance one.

The example of pump designation

"Pump NSSh 500-273У",

where NSSh - multistage mine pump;
500 - standard capacity, m^3/hour;
273 - head, m;
У - carbon version.

"Pump NSSh 500-990",

where NSSh - multistage mine pump;
500 - standard capacity, m^3/hour;
990 - head, m.

The Company improves the pumping equipment and equips pumping units with the motors of different manufactures. Thereby when ordering, please specify overall and mounting dimensions and required parameters according to the recommended form of Data Sheet.

Delivery scope

- pump of NSSh 500-273У...990 type;
- coupling;
- spare parts set;
- set of special tools and accessories.

Main components material

- inner flowing part - steel 20Х13Л as per GOST 977-88 (for NSSh 500-273У - carbon steel);
- shaft - steel 40ХФА as per GOST 4543-71;
- suction and discharge covers - steel 25Л-1 as per GOST 977-88.

NSSh 500-273У, NSSh 500-990 Centrifugal Multistage Mine Pumps

Dimensional drawing of NSSh 500-237У pump

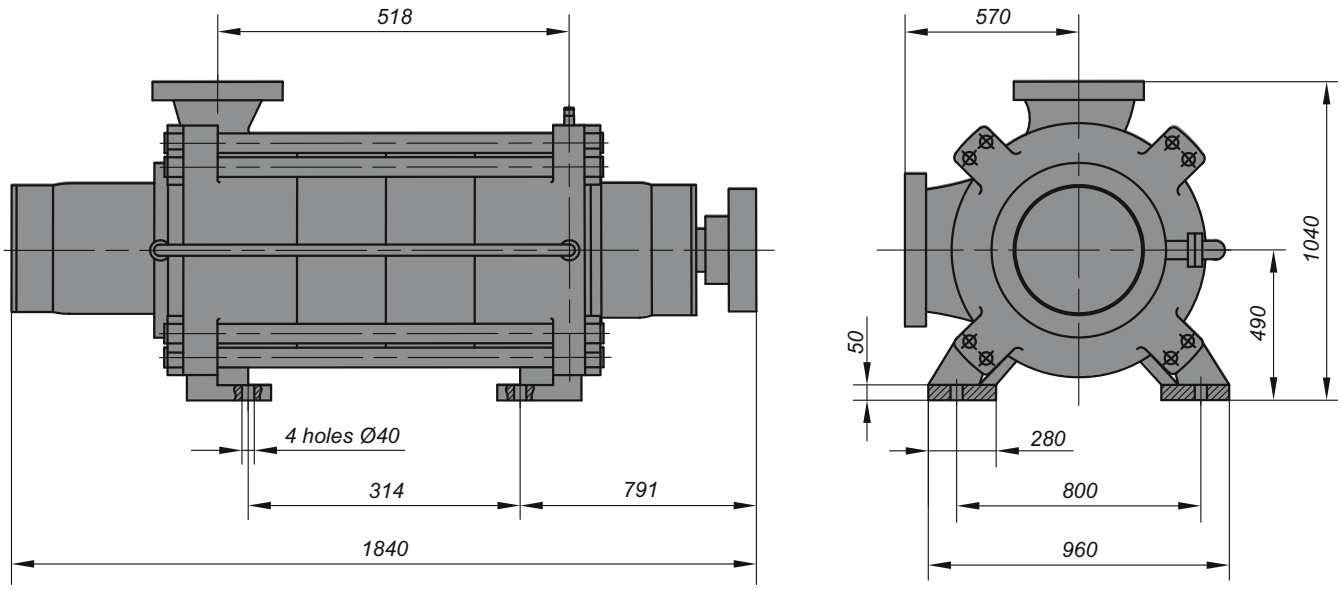

Dimensional drawing of NSSh 500-990 pump

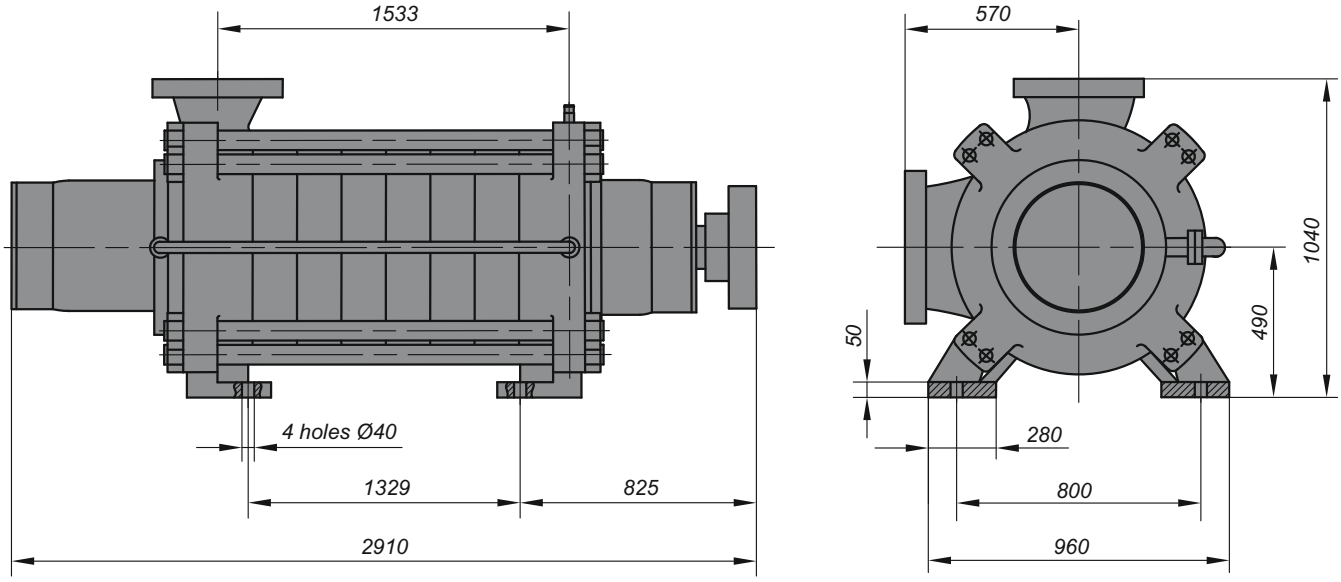

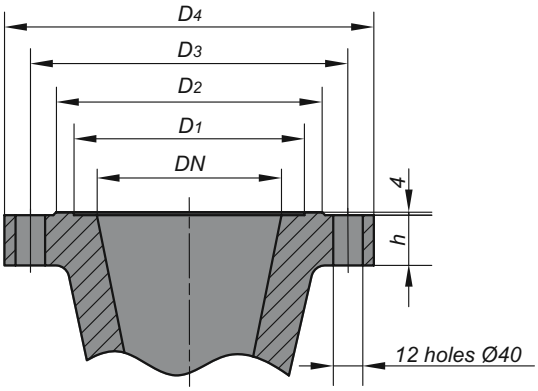

Connecting dimensions of pump nozzles

Dimensions, mm	Inlet nozzle	Outlet nozzle
DN	250	200
D_1	313	255
D_2	360	310
D_3	430	360
D_4	500	425
h	68	60

NSSh 500-273У, NSSh 500-990 Centrifugal Multistage Mine Pumps

Performance and curves of NSSh 500-273У pump at the rotational speed n=24.59 s^{-1} (1475 rpm) with water of density ρ=1000 kg/m^3

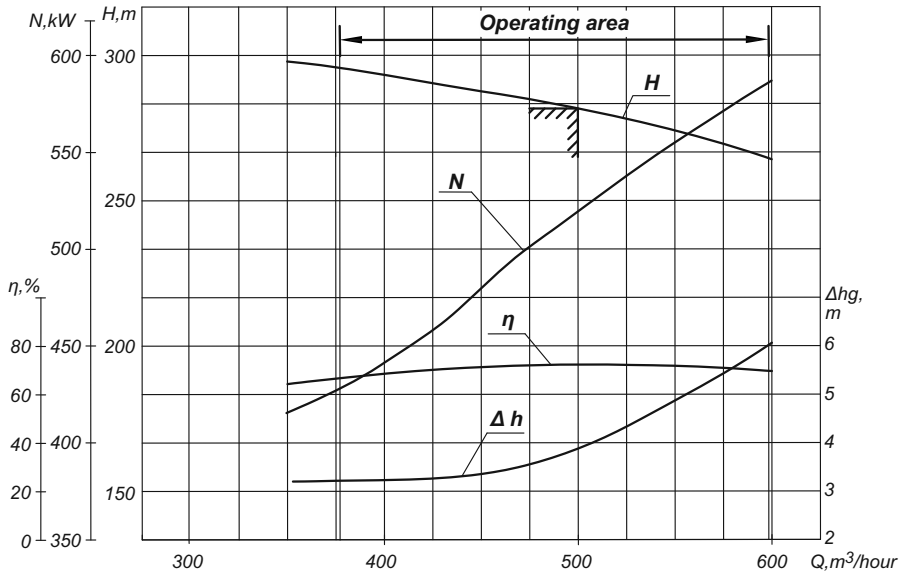

Performance and curves of NSSh 500-990 pump at the rotational speed n=24.59 s^{-1} (1475 rpm) with water of density ρ=1000 kg/m^3

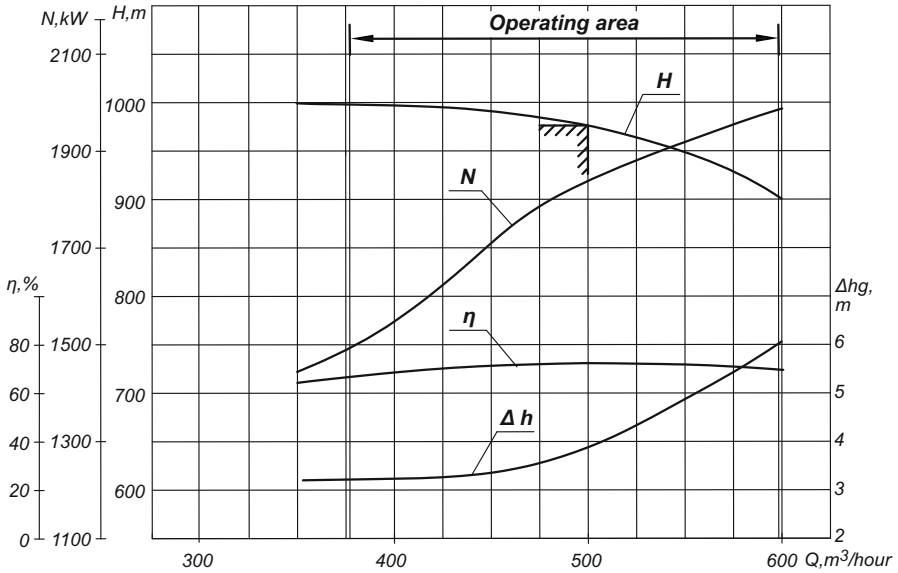

Data Sheet

Pump designation _____

Application _____

_____

Quantity _____ pcs.

№	Parameter (Performance)	Unit of measurement	Customer's requirements
	FUNCTIONAL		
1.1	Capacity	m^3/h	
1.2	Head	m	
1.3	Suction/discharge pressure (not more)	kg/cm^2	
1.4	NPSH (not more)	m	
1.5	Submerged depth	m	
	PUMPED MEDIUM		
2.1	Name		
2.1.1	Percentage composition (for solutions and mixtures)		
2.1.2	pH (for water solutions)		
2.2	Density at tp	kg/m^3	
2.3	Viscosity (kinematic) at tp	cSt	
2.4	Operating temperature and measurements limits, tp	^oC	
2.5	Boiling temperature at working pressure	^oC	
2.6	Vapor pressure at operating temperature	mmhg	
2.7	Toxicity, MPC of liquid vapor	mg/l	
2.8	Explosion hazard, category and group as per Electrical Installation Code		
2.9	Quantity of suspended particles and their character as to abrasion value	g/l	
2.9.1	Size of suspended particles	mm	
2.9.2	Density of suspended particles	kg/m^3	
2.9.3	Property for polymerization and balling		
2.9.4	Presence of dissolved gases		
2.9.5	Presence of undissolved gases		
	SHAFT SEAL		
3.1	Gland single/doubled seal (S/SD)		
3.2	End single/doubled seal (5/55)		

№	Parameter (Performance)	Unit of measurement	Customer's requirements
	OPERATING (INSTALLATION) CONDITIONS		
4.1	Pressure in suction tank	kgf/cm^2	
4.2	Level increase of liquid in suction tank over the pump axial	m	
4.3	Pump installation (indoor, outdoor) and the category as per Electrical Installation Code		
4.4	Maximum winter temperature at outdoor installation	^oC	
4.5	Value of allowable leakage of pumped liquid from pump shaft seal		
4.6	Required location of pump discharge nozzle		
4.7	Climatic version, category of placement at operation as per GOST 15150-69		
4.8	The category of explosion safety and fire area location as per Electrical Installation Code		
	DRIVE		
5.1	Voltage		
5.2	Network power frequency		
5.3	Motor rotational speed		

Appendix: lay-out, other requirements

Name, address and phone of the Company, requesting the pump _____

_____

Signature (name, title)

Date of Data Sheet filling in "____"_____

_____

VVN and DVVN Liquid Ring Vacuum Pumps

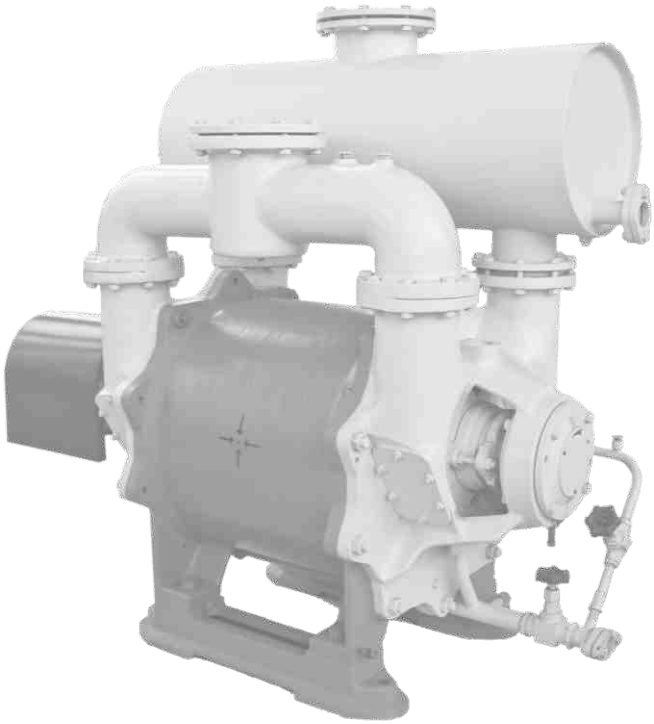

Depending on material of inner flowing part designed for pumping (creation of vacuum) of air, inert or aggressive gases, insoluble in water, to produce or maintain vacuum. Operating medium is water.

Application: chemical, ore mining and smelting industry, food industry, pulp and paper industry, agriculture, construction and medicine.

Main advantage of pumps - easy operation and maintenance. Pumps consist of small quantity of parts. They have no special system for lubrication and oil pumps. All clearances between rotor and static casing are sealed with operating medium. Simplicity of construction, no friction pairs in inner flowing part provide reliability and service life of pump operation.

Technical Data

Designation	Capacity as per initial conditions, m^3/min.	Pressure		Temperature,°C		Water nominal consumption, l/min	Consumed power, kW	Rotational speed (synchr.) rpm	Weight of pump without drive, kg
		suction, MPa	discharge, MPa	supplied water	gas, nominal				
VVN1-12/0.4	12±1.2	0.04	0.1013	15±3	20±5	27	1000	19	390
VVN1-12TM	12±1.2	0.04	0.1013	15±3	20±5	27	1000	19	300
VVN-25/0.4	25±2.5	0.04	0.1013	15±3	20±5	48	750	35	720
VVN-50/0.2N	45±4.5	0.02	0.1013	15±3	20±5	78	600	63	930
VVN2-50N	45±4.5	0.02	0.1013	15±3	20±5	78	600	63	1100
VVN2-50Kh	45±4.5	0.02	0.1013	15±3	20±5	78	600	63	1100
VVN1-50TM	50±0.5	0.04	0.1013	15±3	20±5	78	600	70	920
VVN2-50M	52±5	0.02	0.1013	15±3	20±5	73	600	71	1350
VVN2-150M*	$150^{+15}_{-7,5}$	0.02	0.1013	15±3	20±5	370	300	180	5850
VVN2-300	340^{+34}_{-17}	0.02	0.1013	15±3	20±5	800	250	410	12500
DVVN-150B	150	0.04	0.1013	15±3	20±5	705	186	187.5	8200

* Weight of pump VVN2-150M with gear is 11090 kg.

The example of pump designation

"Pump VVN1-12TM U3 20-057447991-047-99",
where VVN – liquid-packed ring-type vacuum pump;
1 and 2 – nominal suction pressure: 1 – 0.04 MPa or 2 – 0.02 MPa;
12 – standard capacity, m^3/min;
T- inner flowing part material:

T	- titanium alloy BT1-0;
N	- stainless steel;
	- 06XH28МДТ for VVN2-50N;
	- 12X18H10T for VVN-50/0.2N;
Kh	- alloy XH65MB;
Without letter	- carbon steel or gray cast iron;

M - modernized;
TU - Specifications according to which the pumps are manufactured.

The Company improves the pumping equipment and equips pumping units with the motors of different manufactures. Thereby when ordering, please specify overall and mounting dimensions and required parameters according to the recommended form of Data Sheet.

VVN1-12/0.4 Liquid Ring Vacuum Pump

Dimensional drawing of VVN1-12/0.4 pump

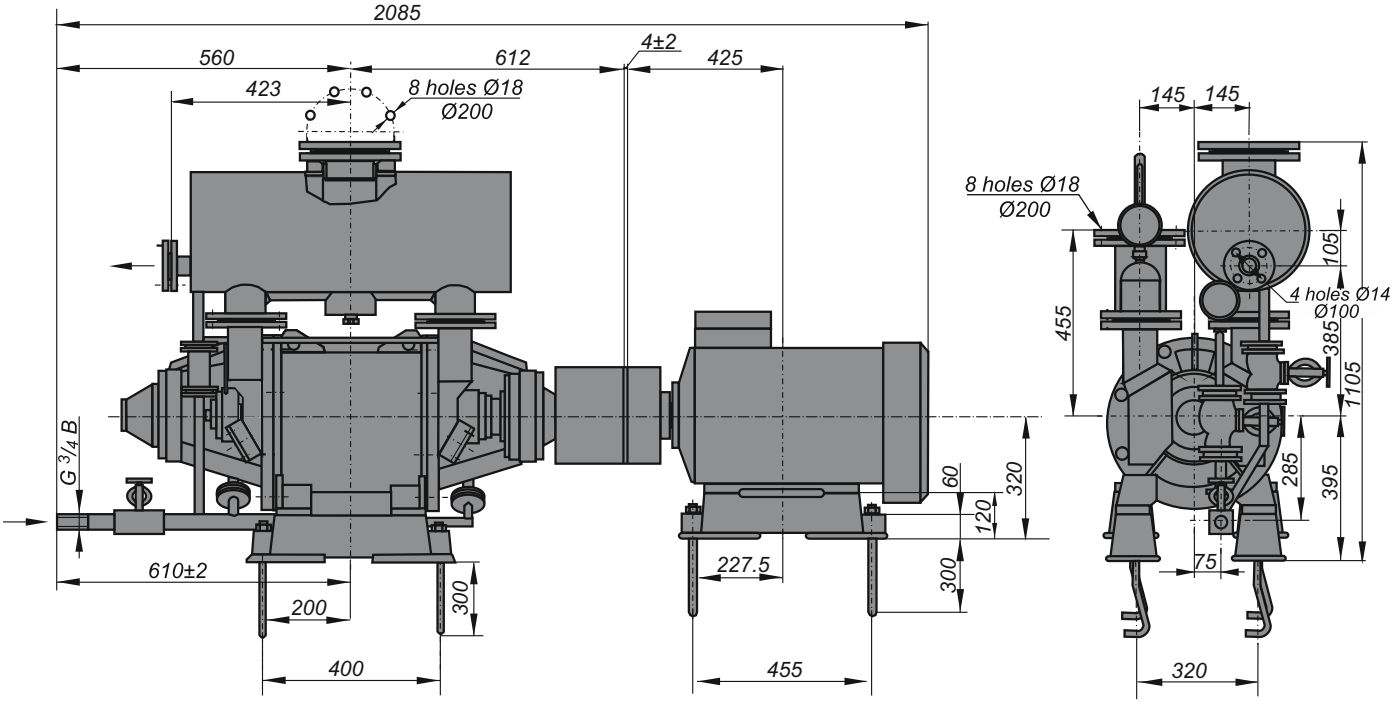

Performances and curves of VVN1-12/0.4 pump

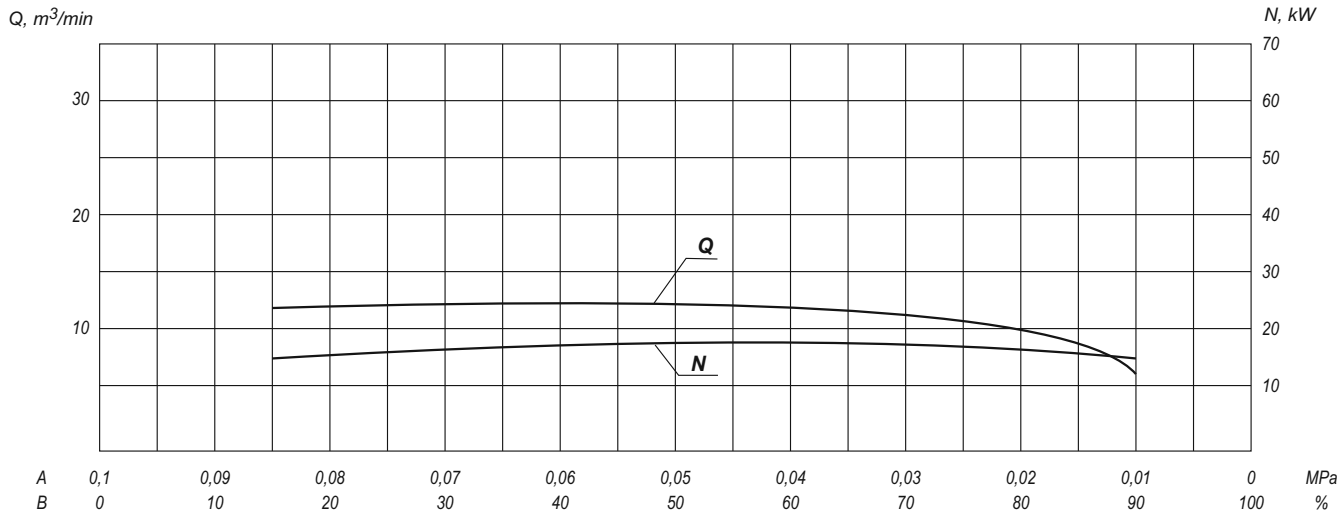

A - suction absolute pressure, mmhg
B - arefication, %

VVN1-12TM Liquid Ring Vacuum Pump

Dimensional drawing of VVN1-12TM pump

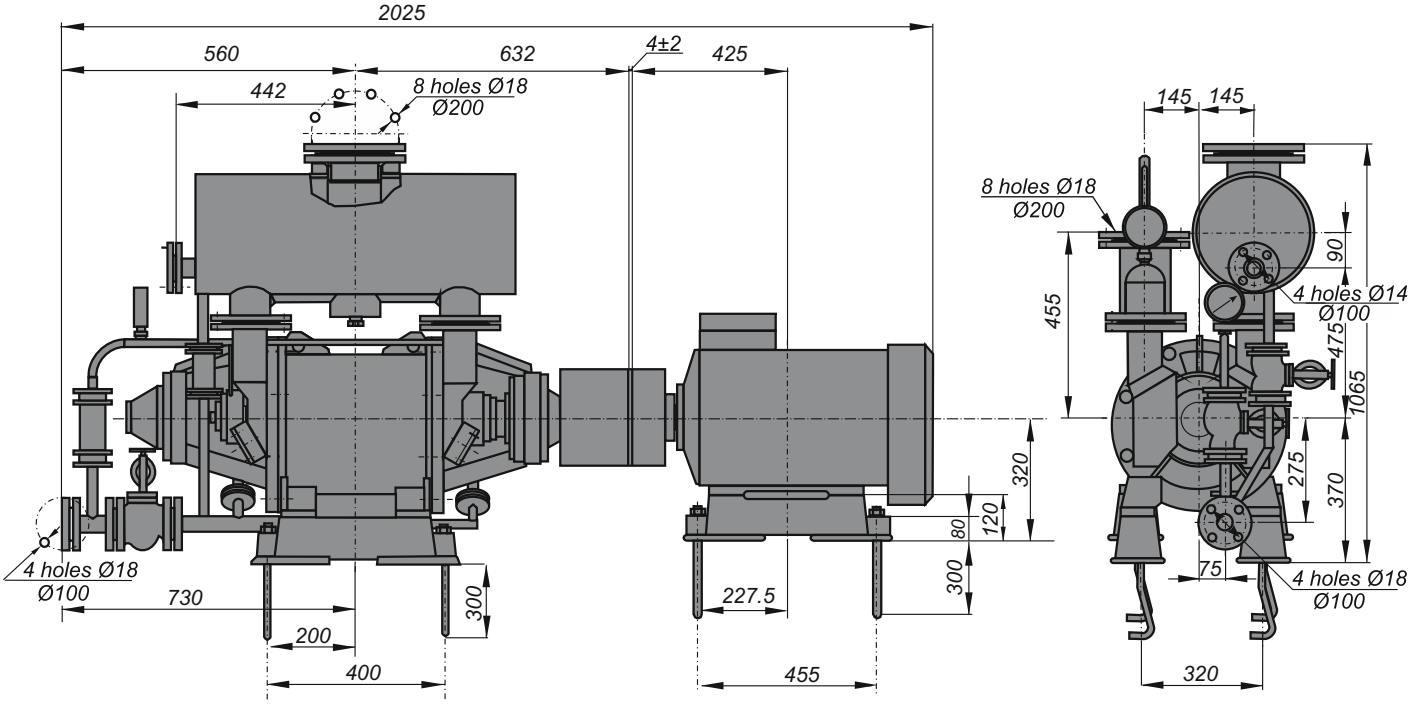

Performances and curves of VVN1-12TM pump

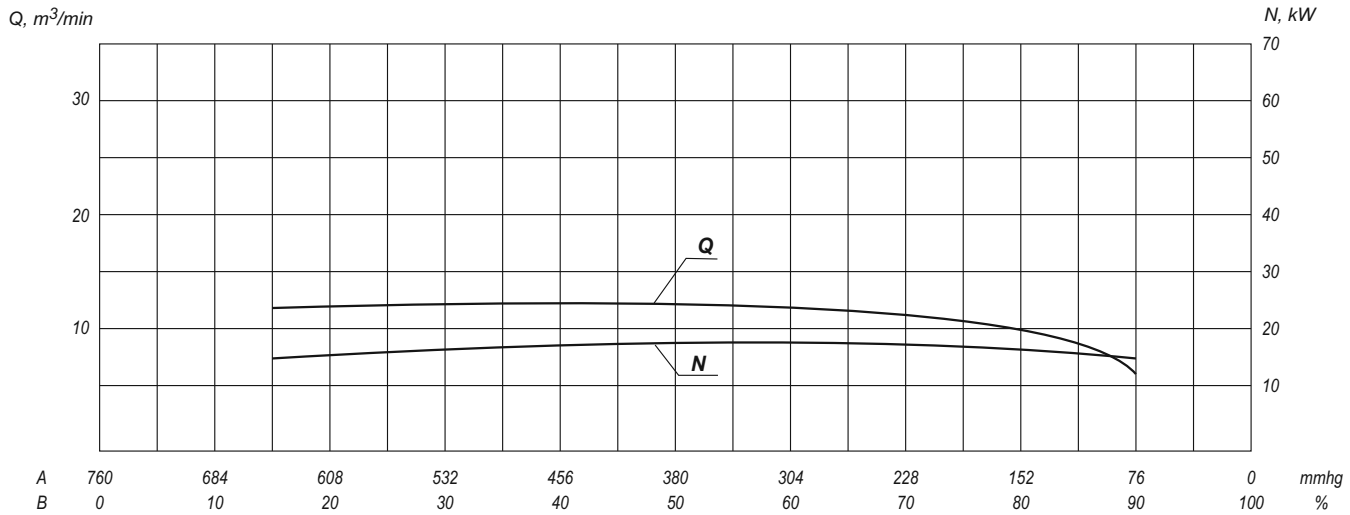

A - suction absolute pressure, mmhg
B - arefication, %

VVN-25/0.4 Liquid Ring Vacuum Pump

Dimensional drawing of VVN-25/0.4 pump

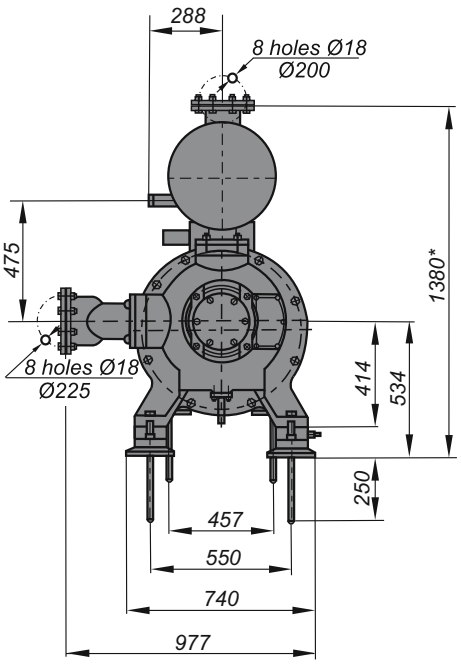

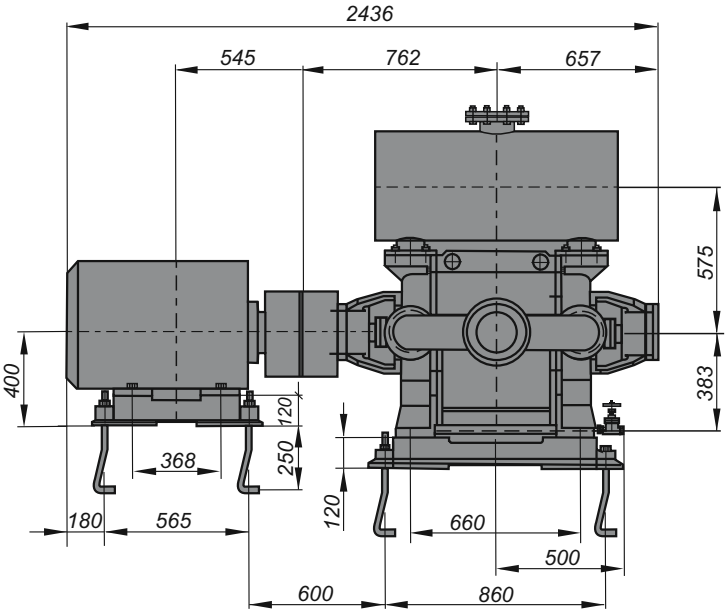

Performances and curves of VVN-25/0.4 pump

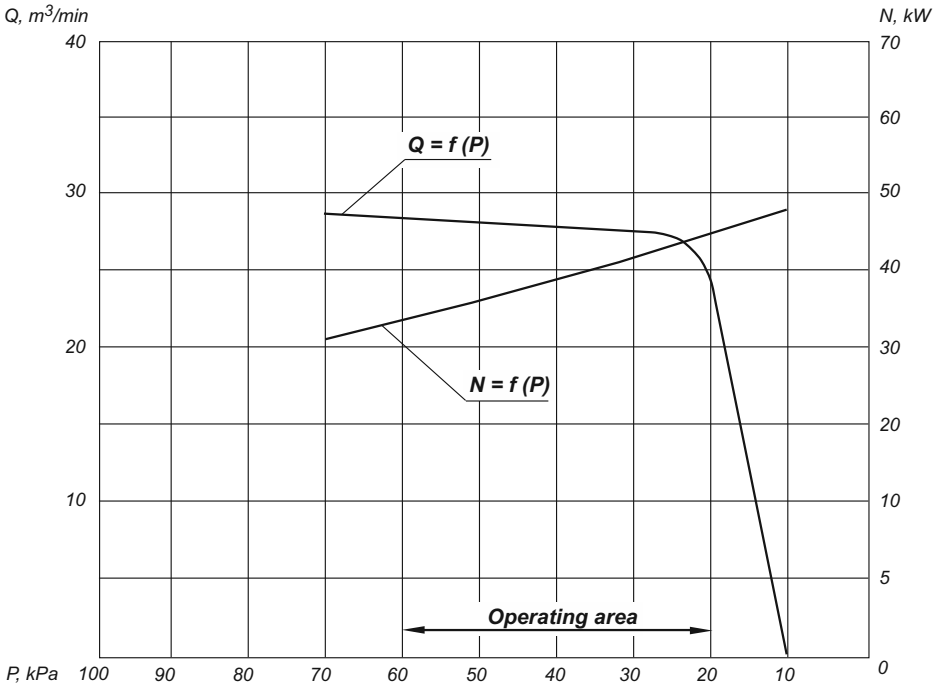

$N = 12{,}5\ c^{-1}$ (750 rpm); $f = 50$ Hz

VVN-50/0.2N; VVN2-50N; VVN2-50Kh; VVN1-50TM; VVN2-50M
Liquid Ring Vacuum Pump

Dimensional drawing of pumps

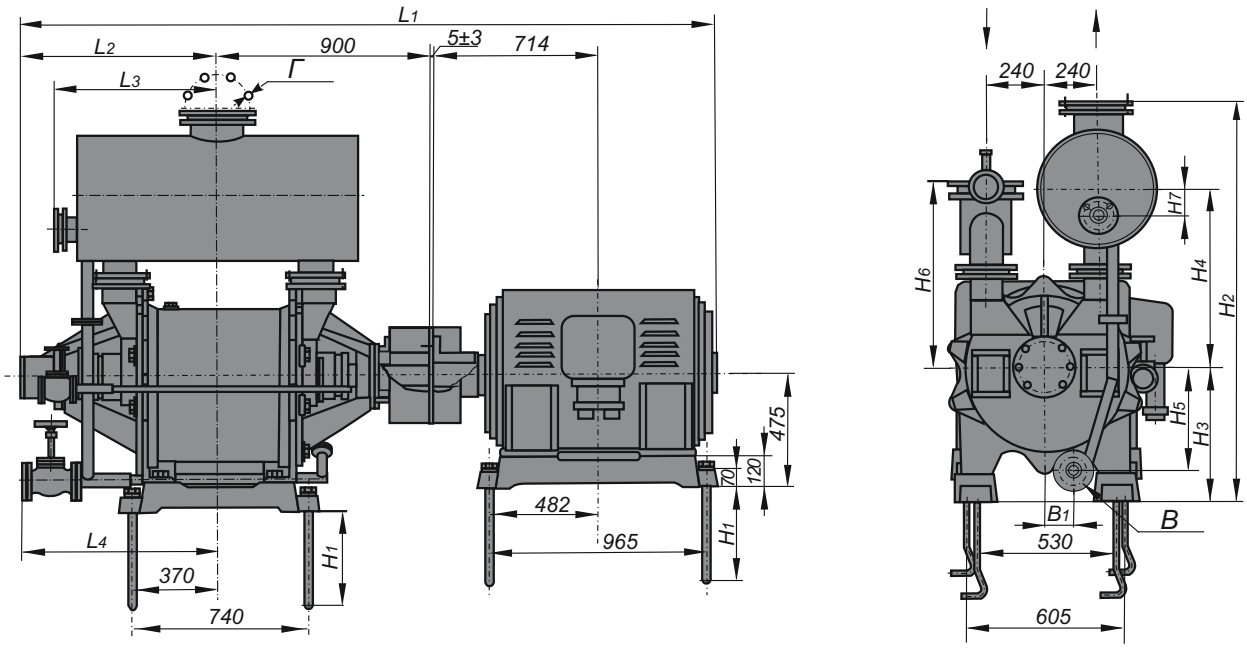

Pumps overall and connecting dimensions, weight

Designation	Dimensions, mm												B, mm		Г, mm		Weight,
	L1	L2	L3	L4	B1	H1	H2	H3	H4	H5	H6	H7	Ø	n holes Ø	Ø	n holes Ø	kg
VVN1-50TM	2910	800	680	800	120	400	1675	595	682	485	685	150	110	4 отв. Ø18	280	8 отв. Ø18	2348
VVN-50/0,2N	2920	800	680	810	120	400	1675	595	682	583	685	140	100	4 отв. Ø18	280	8 отв. Ø18	2650
VVN2-50M	2826	810	725	775	70	335	1665	595	717	455	717	170	80	2 отв. Ø18	280	8 отв. Ø18	2760
VVN2-50N	3015	805	675	800	55	400	1610	595	680	470	685	140	110	4 отв. Ø18	280	8 отв. Ø18	2900
VVN2-50Kh	2920	805	695	800	116	400	1585	570	680	485	685	140	100	4 отв. Ø18	280	8 отв. Ø18	2535

Performances and curves of pumps

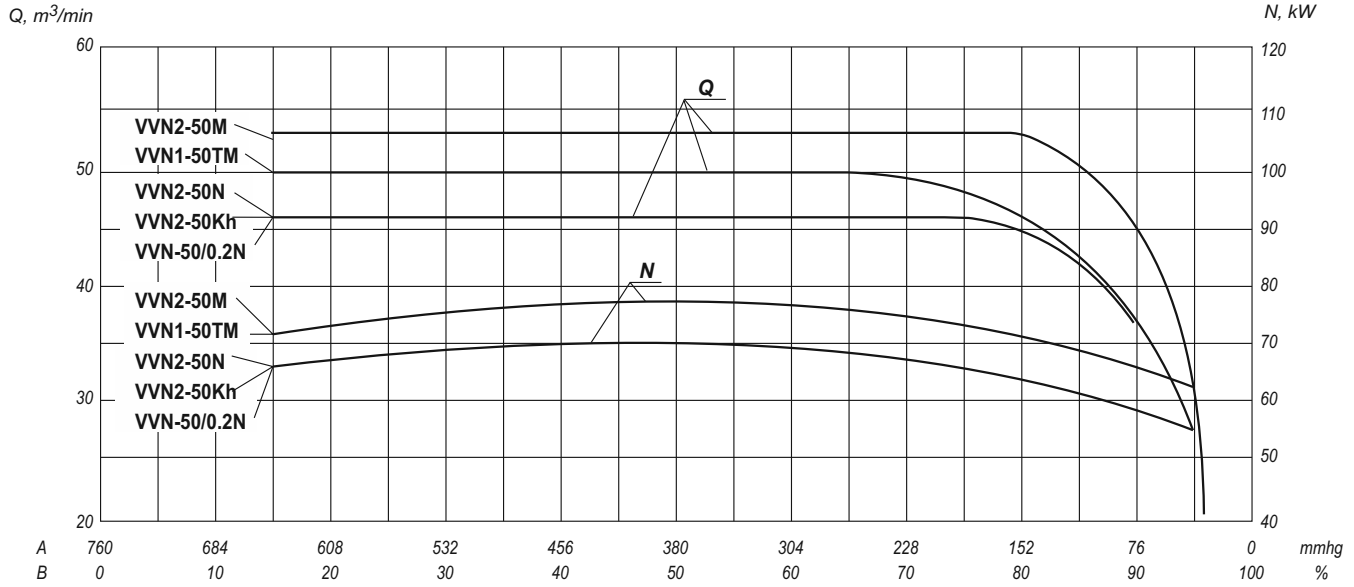

A - suction absolute pressure, mmhg
B - arefication, %

VVN2-150M Liquid Ring Vacuum Pump

Dimensional drawing of VVN2-150M pump

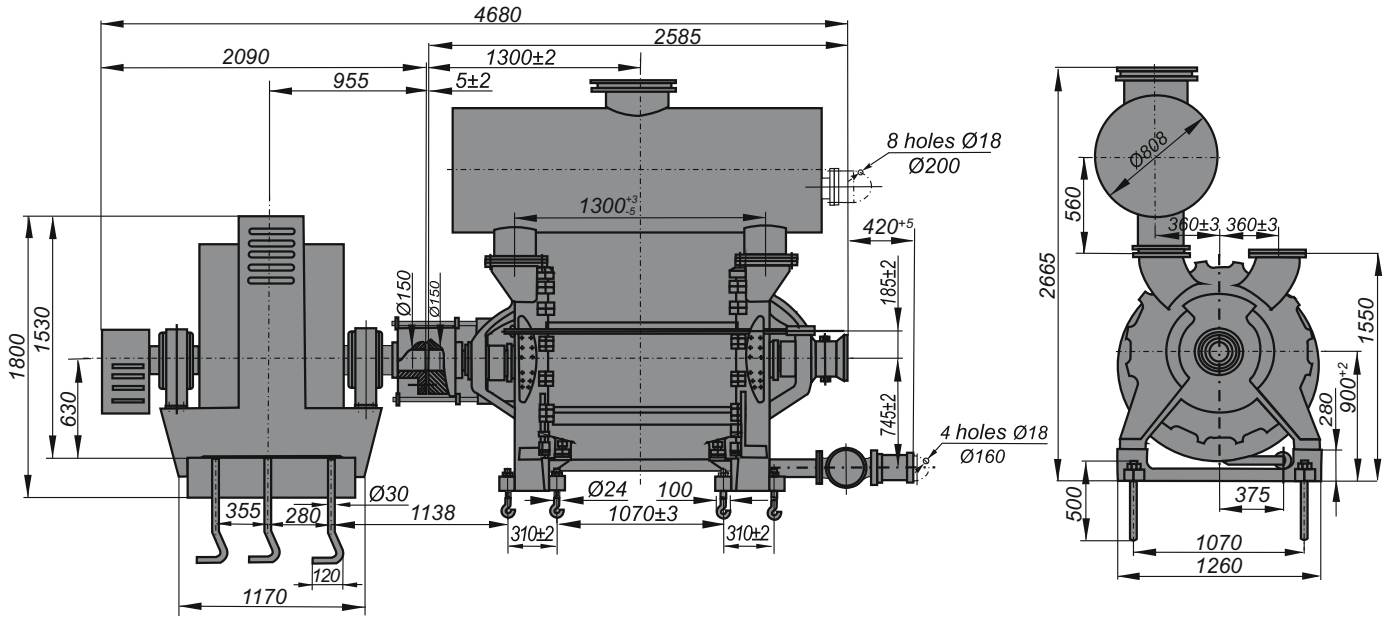

Performances and curves of VVN2-150M pump

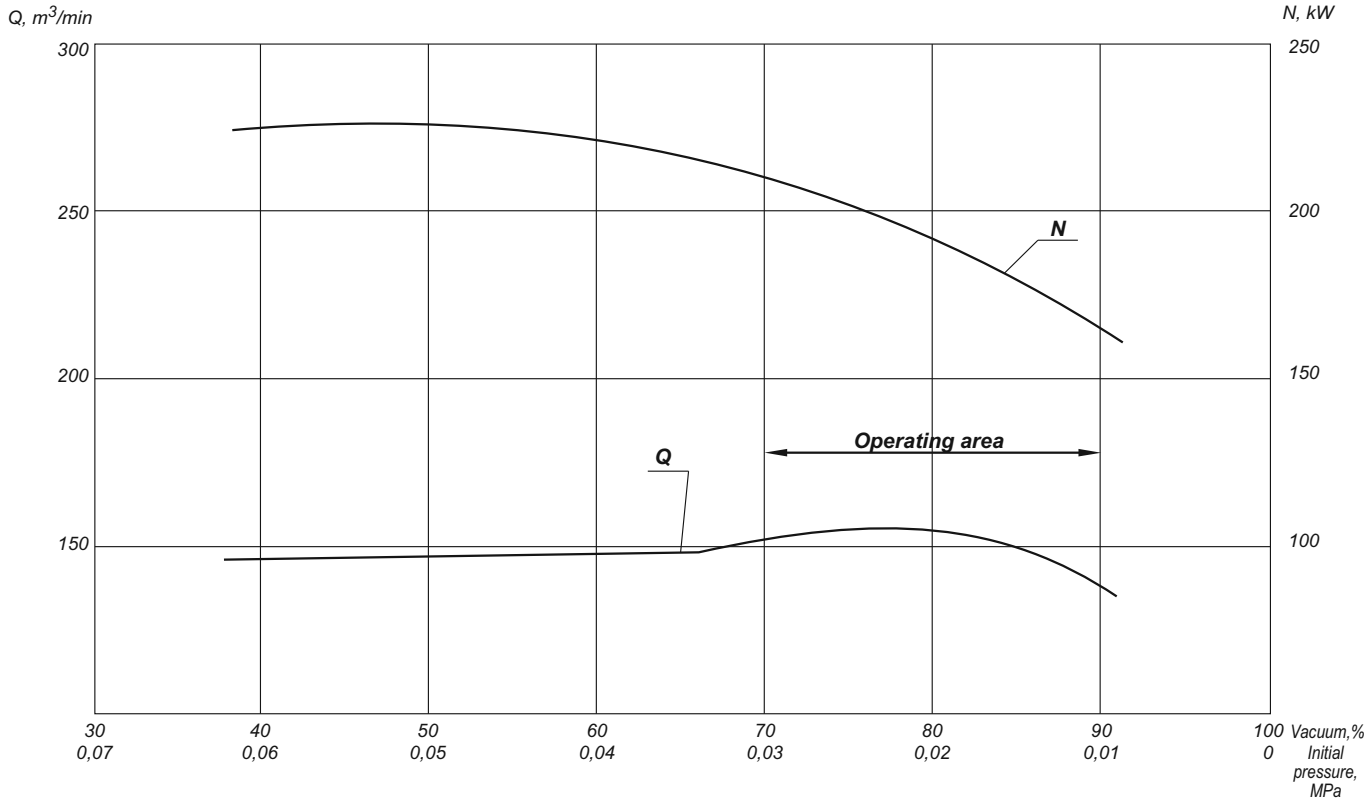

VVN2-150M Liquid Ring Vacuum Pump with Gearbox

Dimensional drawing of VVN2-150M pump with gearbox

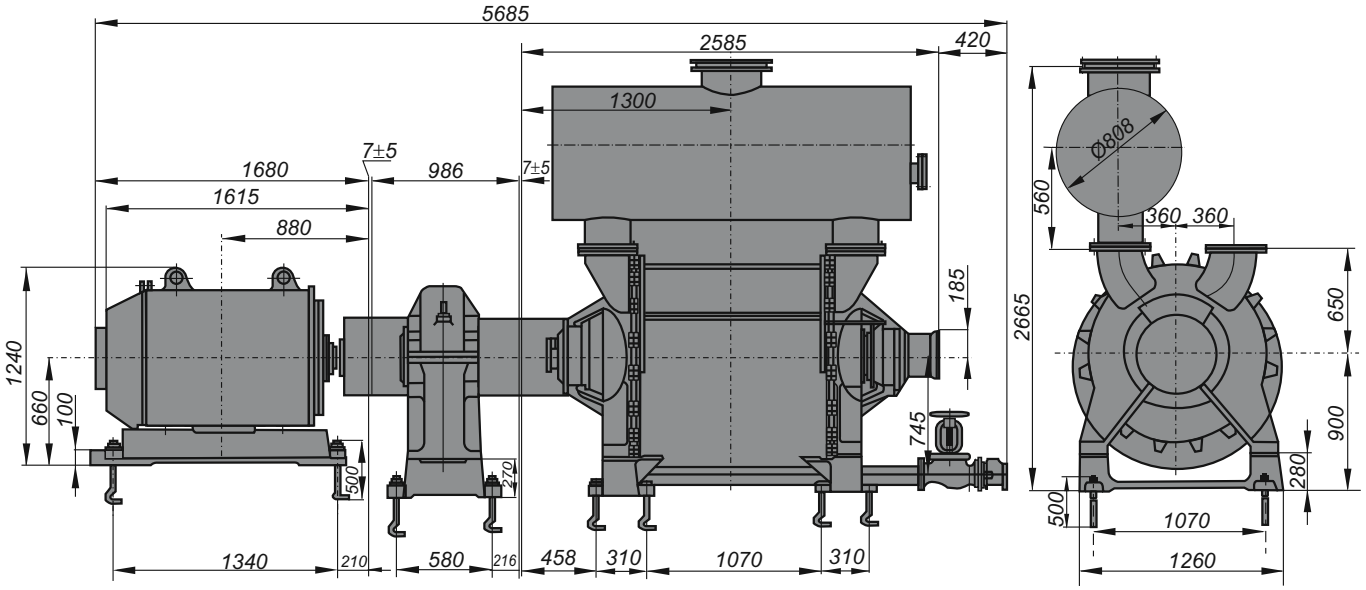

Performances and curves of VVN2-150M pump with gearbox

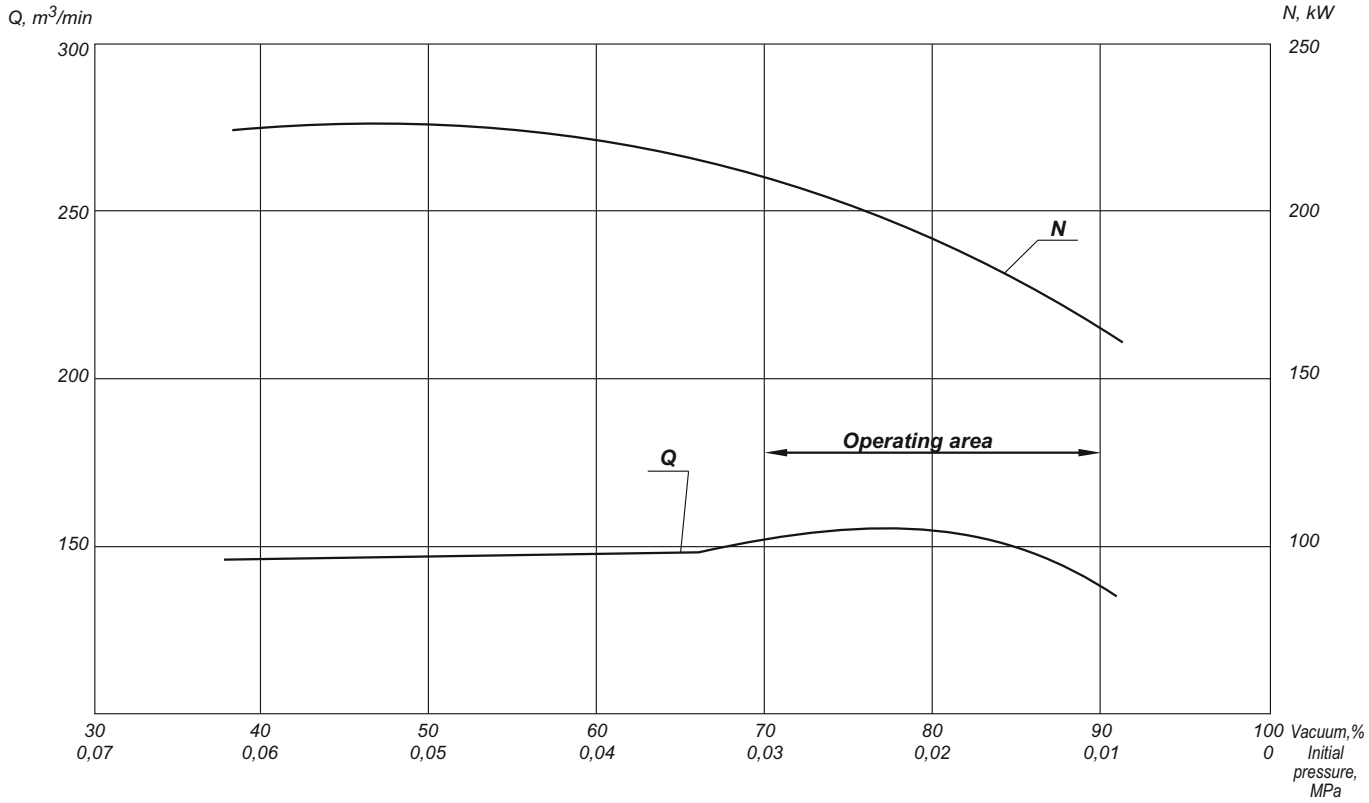

VVN2-300 Liquid Ring Vacuum Pump

Dimensional drawing of VVN2-300 pump

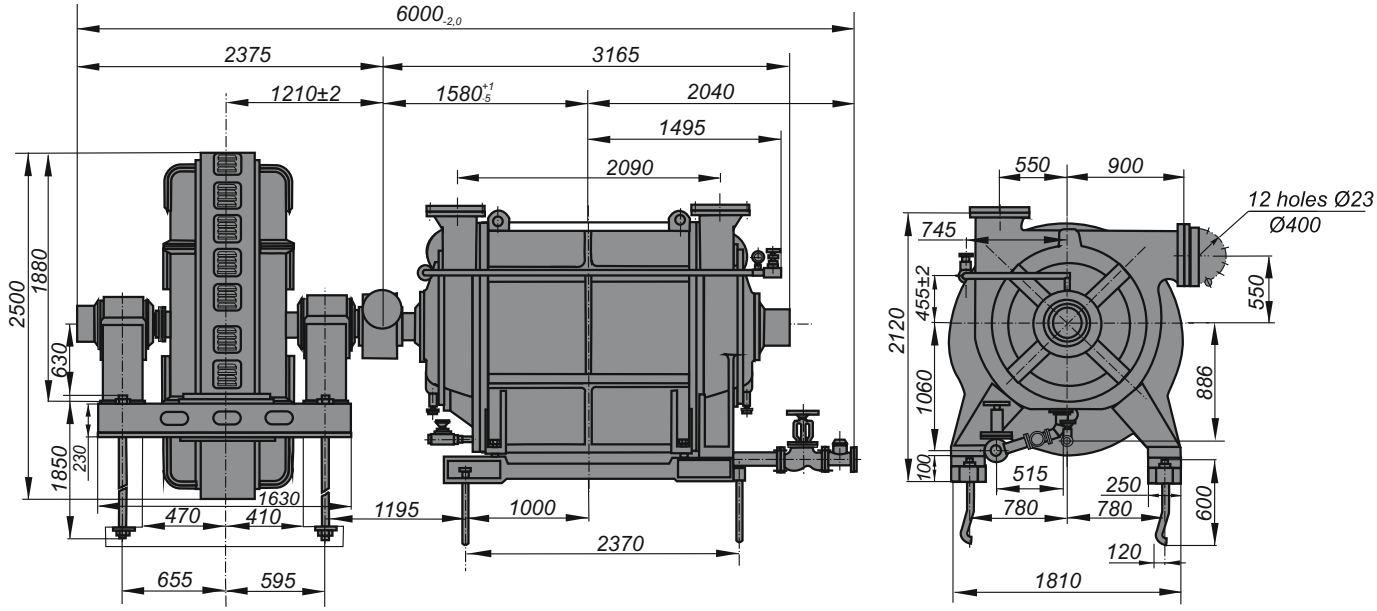

Performances and curves of VVN2-300 pump

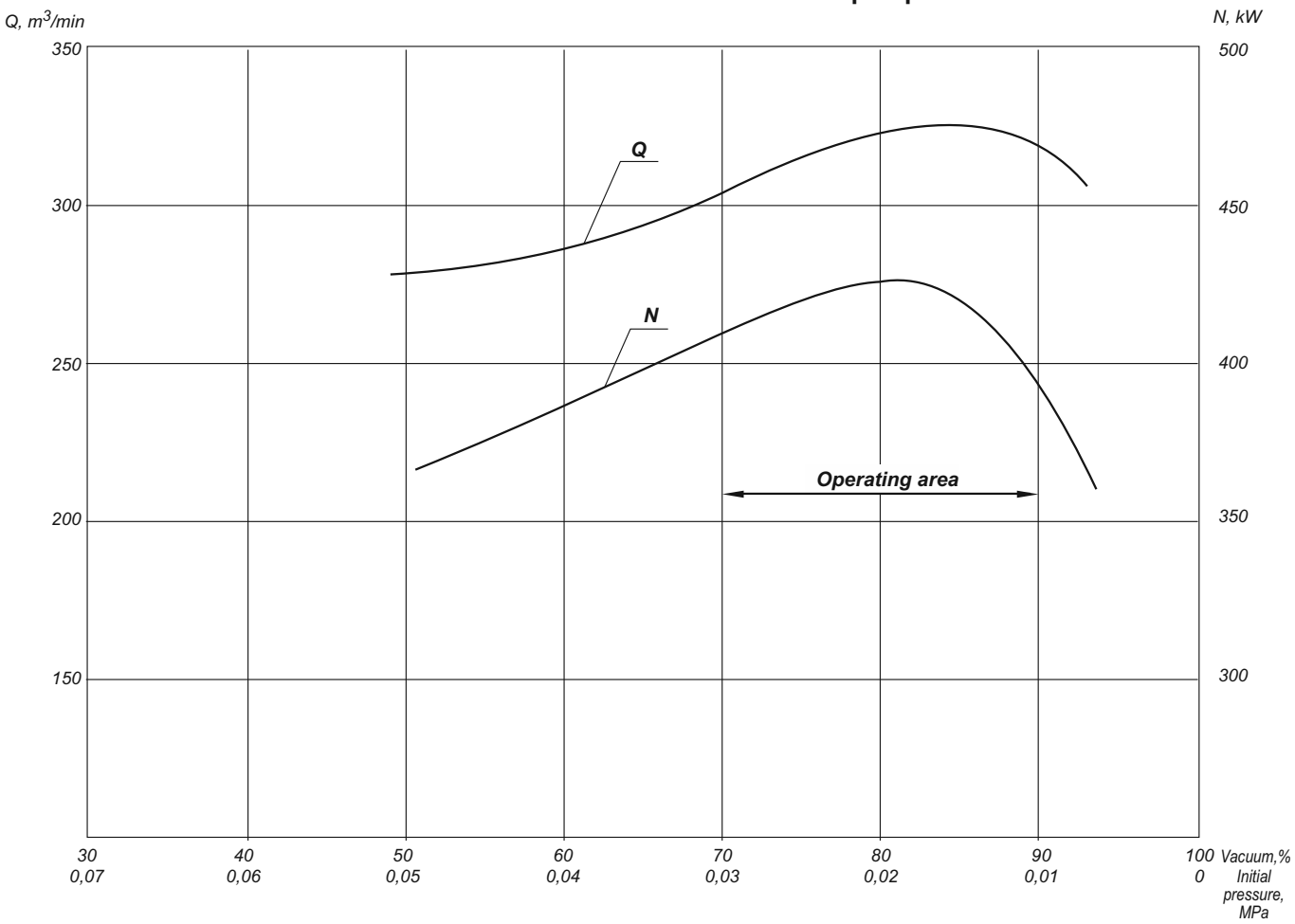

DVVN-150B Liquid Ring Vacuum Pump

Dimensional drawing of DVVN-150B pump

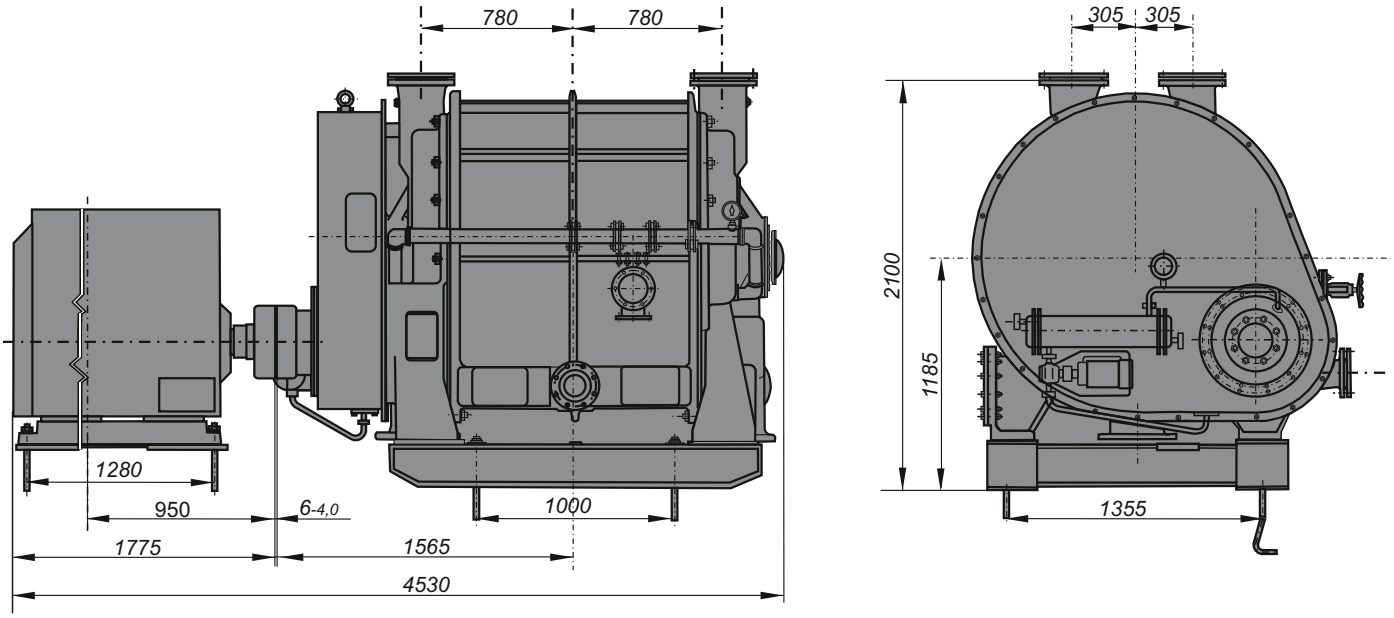

Performances and curves of DVVN-150B pump

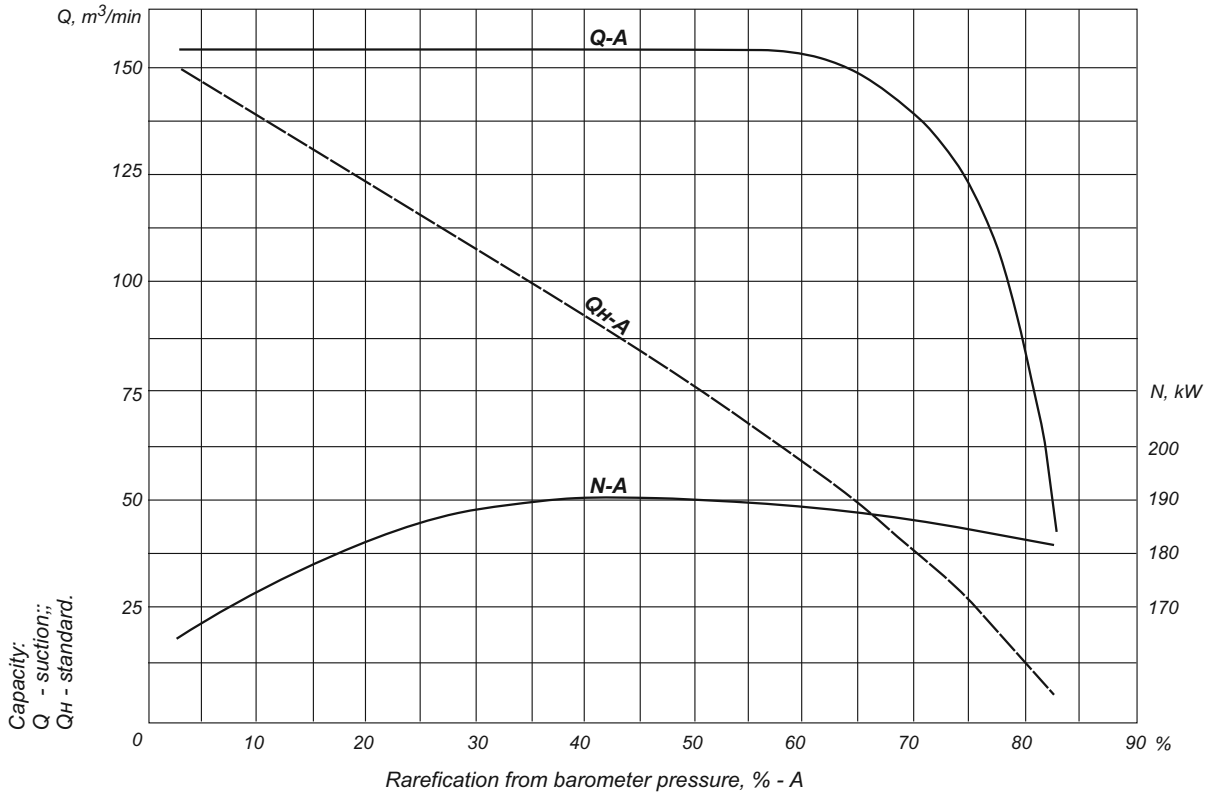

VK Liquid Ring Compressors

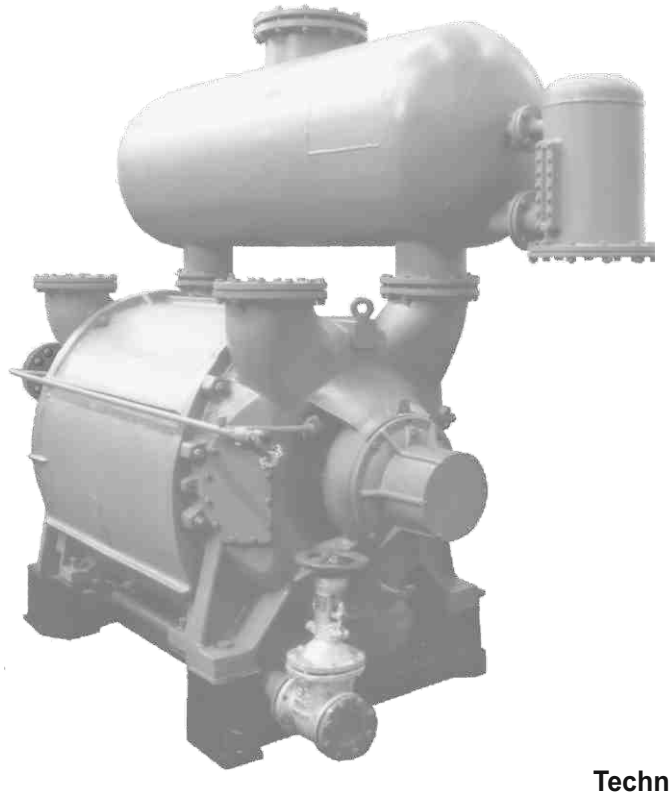

Designed, depending on flowing part material, for charging of air, inert or aggressive gases, non-soluble in water.

Application: chemical, metallurgical, food industry, machine-building, agriculture and construction.

Main advantage of compressors - easy operation and maintenance. They have no special system for lubrication and oil pumps. All clearances between rotor and static casing are sealed with operating medium. Simplicity of construction, no friction pairs in inner flowing part provide reliability and service life of pump operation.

Technical Data

Designation	Capacity as per initial conditions, m^3/min.	Pressure		Temperature,°C		Water nominal consumption, l/min	Consumed power, kW	Rotational speed (synchr.) rpm	Weight of pump without drive, kg
		suction, MPa	discharge, MPa	supplied water	gas, nominal				
VK-25/1.5	25±2.5	0.1013	0.15	15±3	20±5	45	750	45	1200
VK-50	50±5	0.03	0.173	15±3	20±5	125	600	190	3000
VK-50N	50±5	0.1013	0.15	15±3	20±5	78	600	80	1800
VK-50T	50±5	0.1013	0.15	15±3	20±5	78	600	80	1360
VK-50M1	$52.5^{+5.0}_{-2.5}$	0.1013	0.15	15±3	20±5	74	600	92	2150
VK-60/1.0	60±6	0.1013	0.196	15±3	20±5	134	600	132	1700
VK-60/2.5N*	60^{+3}_{-6}	0.1013	0.25	15±3	20±5	150	750	190	1800
VK-100/1.0	$100^{+10}_{-5.0}$	0.1013	0.196	15±3	20±5	265	500	250	4360
VK-150/1.2N	$150^{+15}_{-7.5}$	0.1013	0.22	15±3	20±5	300	600	450	5000
VK-150/1.2	$150^{+15}_{-7.5}$	0.1013	0.22	15±3	20±5	300	600	450	5200
VVK-150	140^{+10}_{-20}	0.05	0.15	5÷35	0÷40	320	300	230	11174

* - manufactured according to 1.4270-628.00-00T3.
Motor serves as a drive. It is not included in the delivery scope. Compressor can be equipped with any engine of corresponding power and rotational speed.

The example of compressor designation

"Compressor VK-50M1 TU U3 20-057447991-047-99",

where VK – liquid-packed ring-type compressor;
50 – standard capacity, m³/min;
T- inner flowing part material:
- T - titanium alloy;
- N - stainless steel 12X18H10T;
- Without letter - carbon steel or gray cast iron;

M1 - number of modernization;
TU - specifications according to which the pumps are manufactured.

The Company improves the pumping equipment and equips pumping units with the motors of different manufactures. Thereby when ordering, please specify overall and mounting dimensions and required parameters according to the recommended form of Data Sheet.

VK-25/1.5 Liquid Ring Compressor

Dimensional drawing of VK-25/1.5 compressor

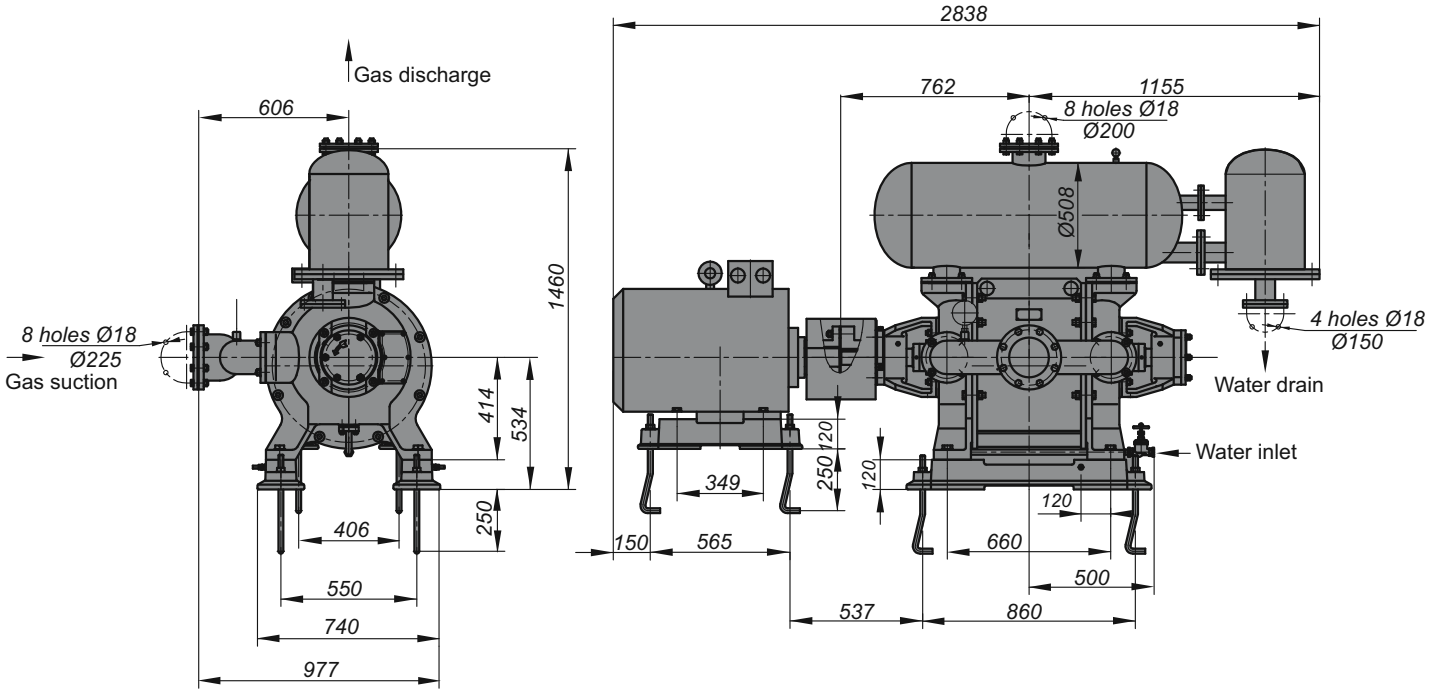

Performances and curves of VK-25/1.5 compressor

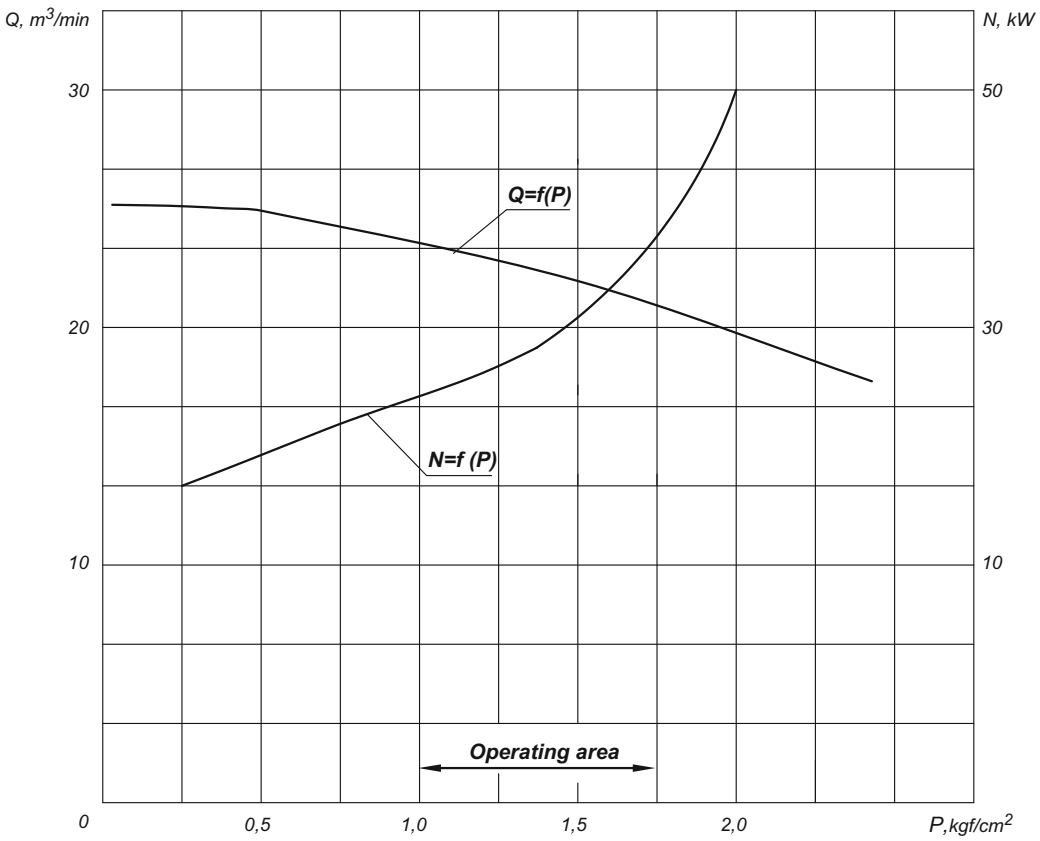

N = 12,25 s^{-1} (735 rpm); f = 50 Hz

VK-50 Liquid Ring Compressor

Dimensional drawing of VK-50 compressor

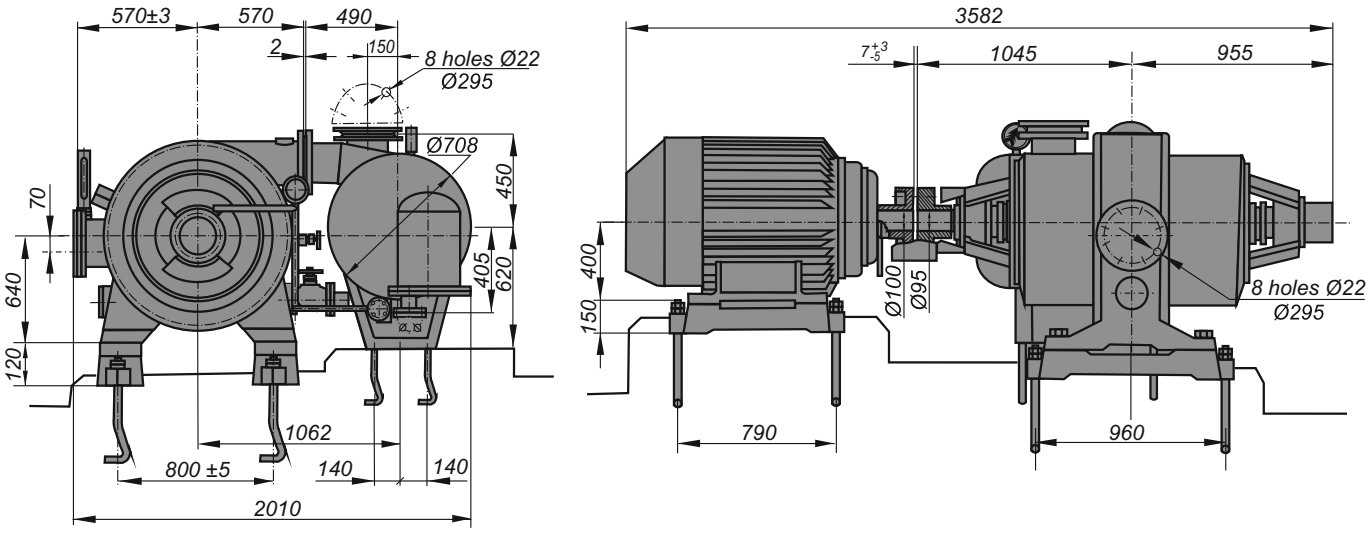

Motor			
Designation	kW	V	rpm
VAO2-355L10-U2,5	200	380/660	600

Performances and curves of VK-50 compressor

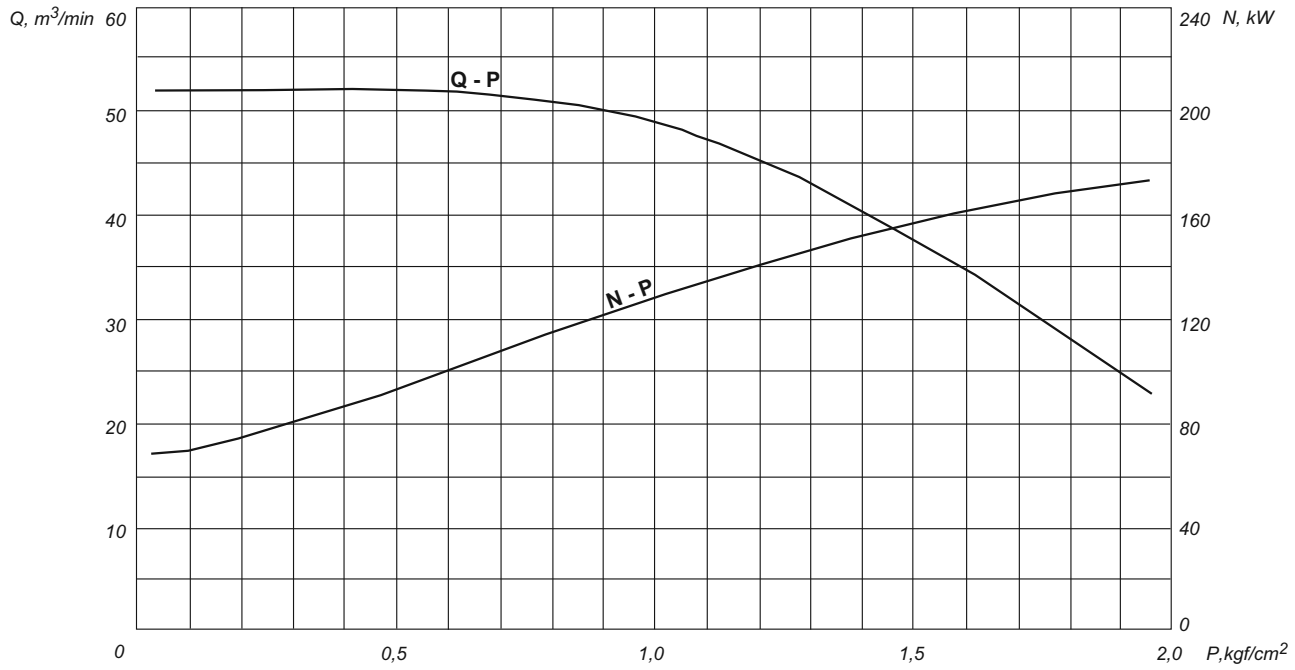

VK-50M1, VK-50H, VK-50T Liquid Ring Compressors

Dimensional drawing of compressors

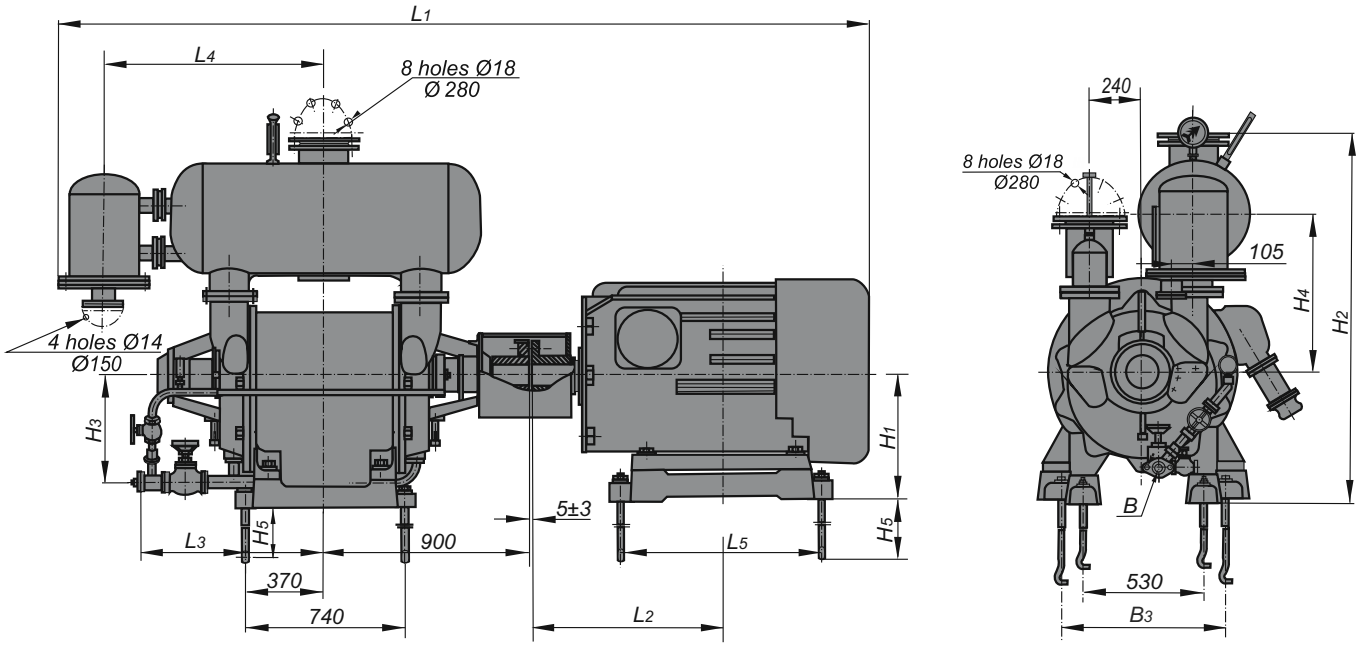

Compressors overall and connecting dimensions, weight

Designation	Dimensions, mm											B, mm		Weight,
	L_1	L_2	L_3	L_4	L_5	H_1	H_2	H_3	H_4	H_5	B_3	Ø	n holes Ø	kg
VK-50M1	3400	860	775	1025	965	475	1670	455	725	335	610	102	2 отв.Ø18	4130
VK-50N	3285	780	945	1042	965	475	1675	450	715	400	610	125	4 отв.Ø18	3926
VK-50T	3285	780	945	975	965	475	1675	450	715	400	610	125	4 отв.Ø18	3410

Performances and curves of compressors

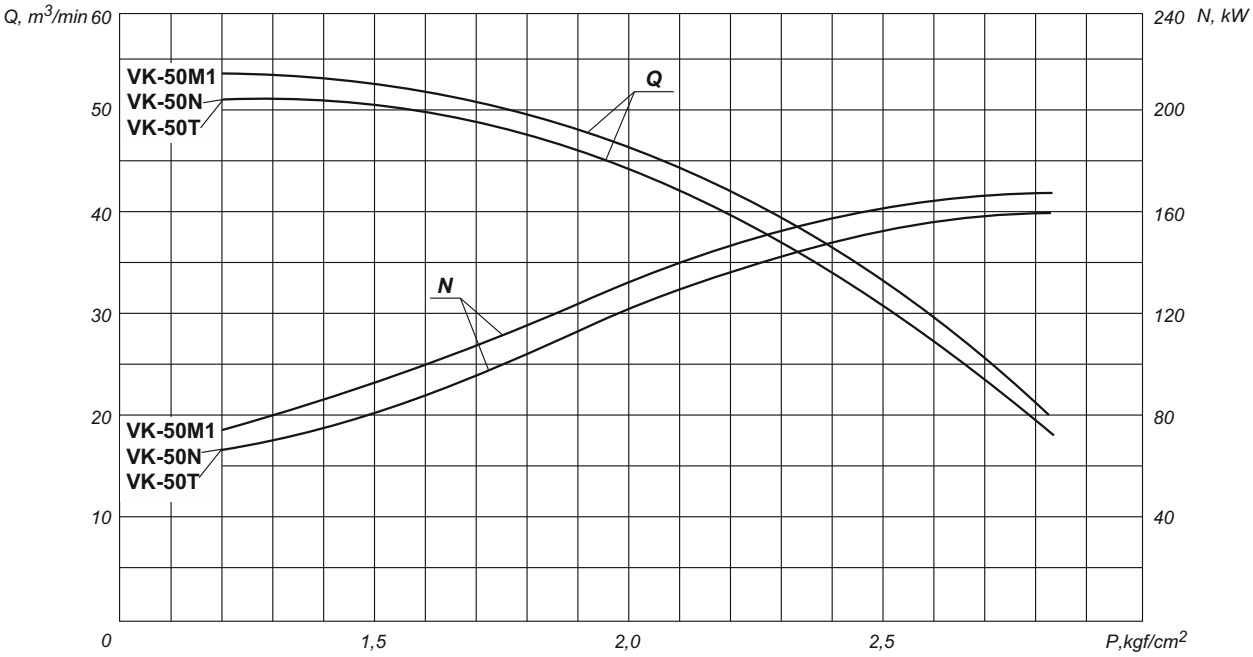

VK-60/1.0 Liquid Ring Compressor

Dimensional drawing of VK-60/1.0 compressor

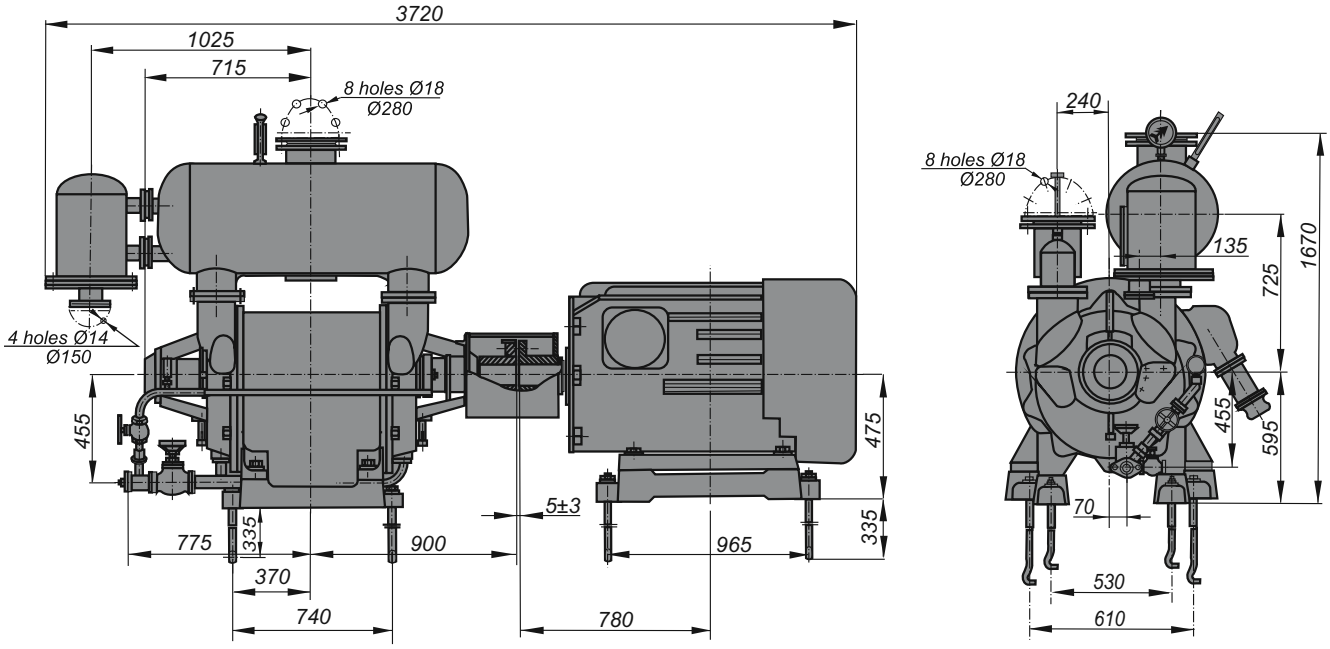

Motor			
Designation	kW	V	rpm
VAO3-355L-10UKhL4	200	380	590

Performances and curves of VK-60/1.0 compressor

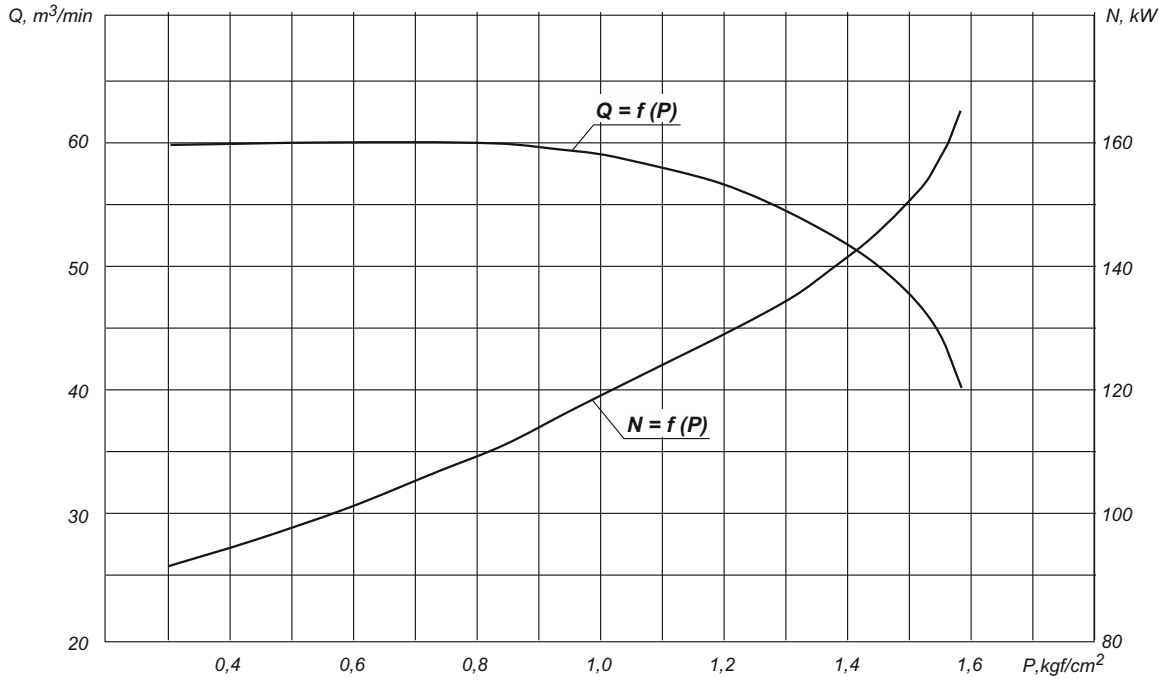

VK-60/2.5N Liquid Ring Compressor

Dimensional drawing of VK-60/2.5N compressor

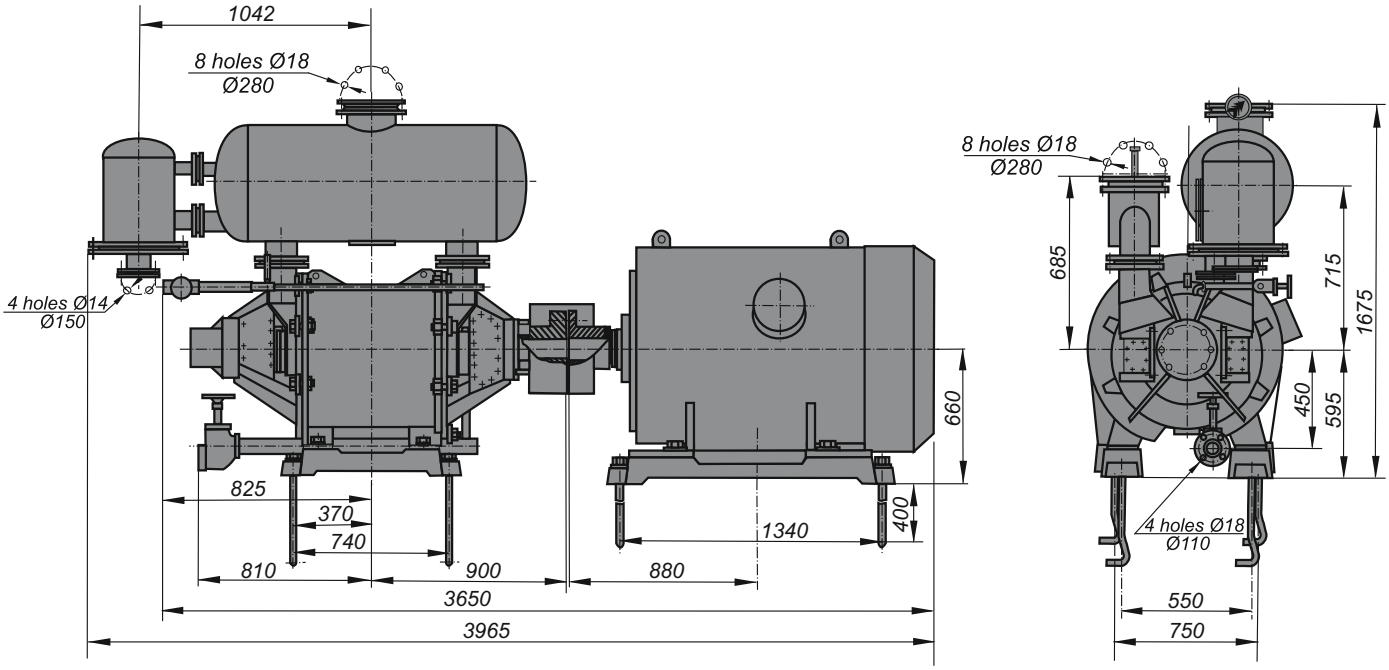

Motor			
Designation	kW	V	rpm
VAO4-450LA8U3	200	6000	750

Performances and curves of VK-60/2.5N compressor

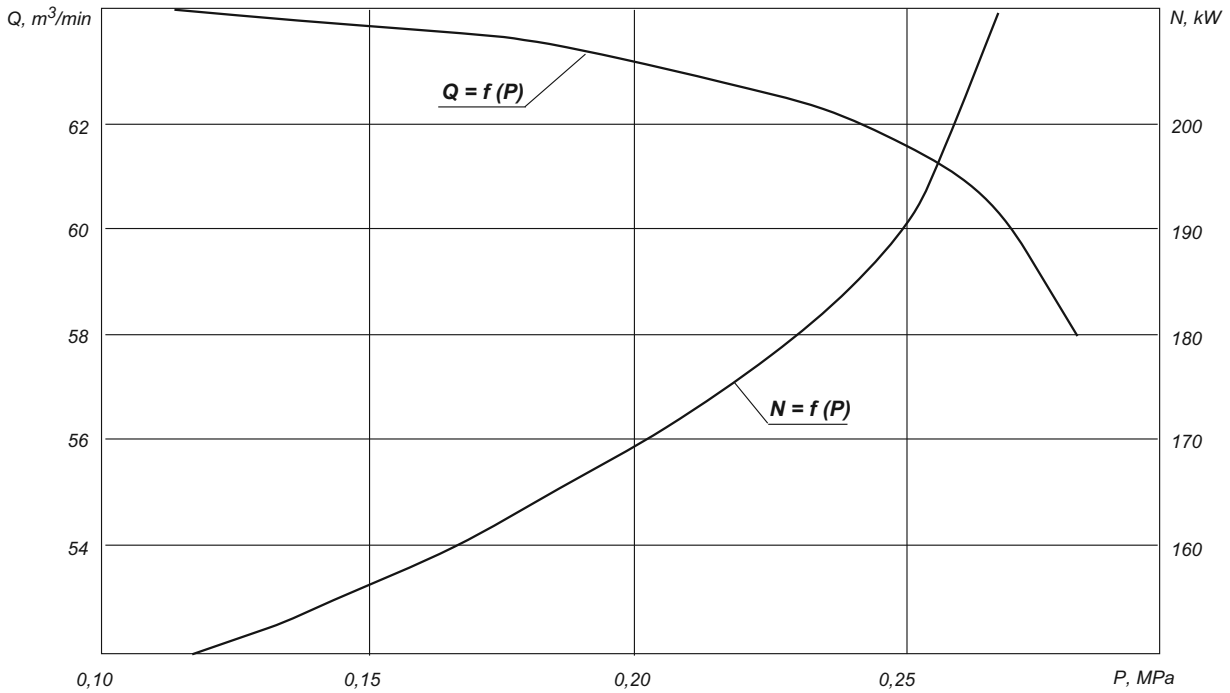

VK-100/1.0 Liquid Ring Compressor

Dimensional drawing of VK-100/1.0 compressor

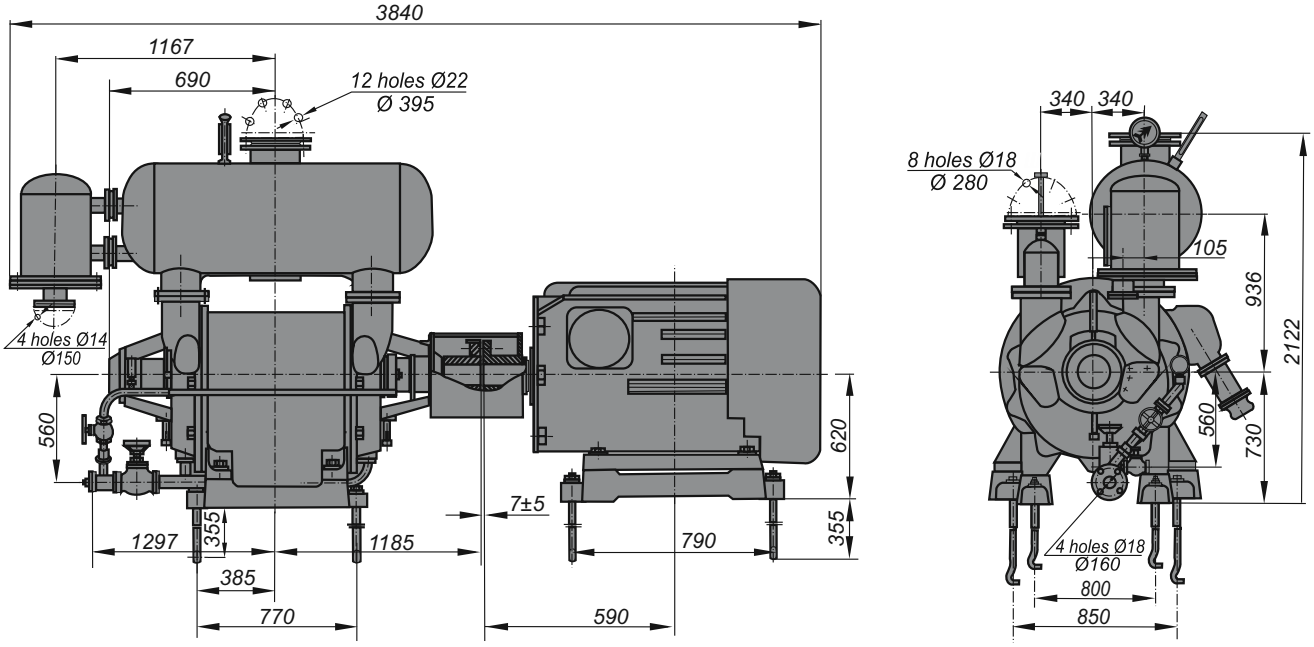

Motor			
Designation	kW	V	rpm
SD2-85/35-12U	250	380	500

Performances and curves of BK-100/1.0 compressor

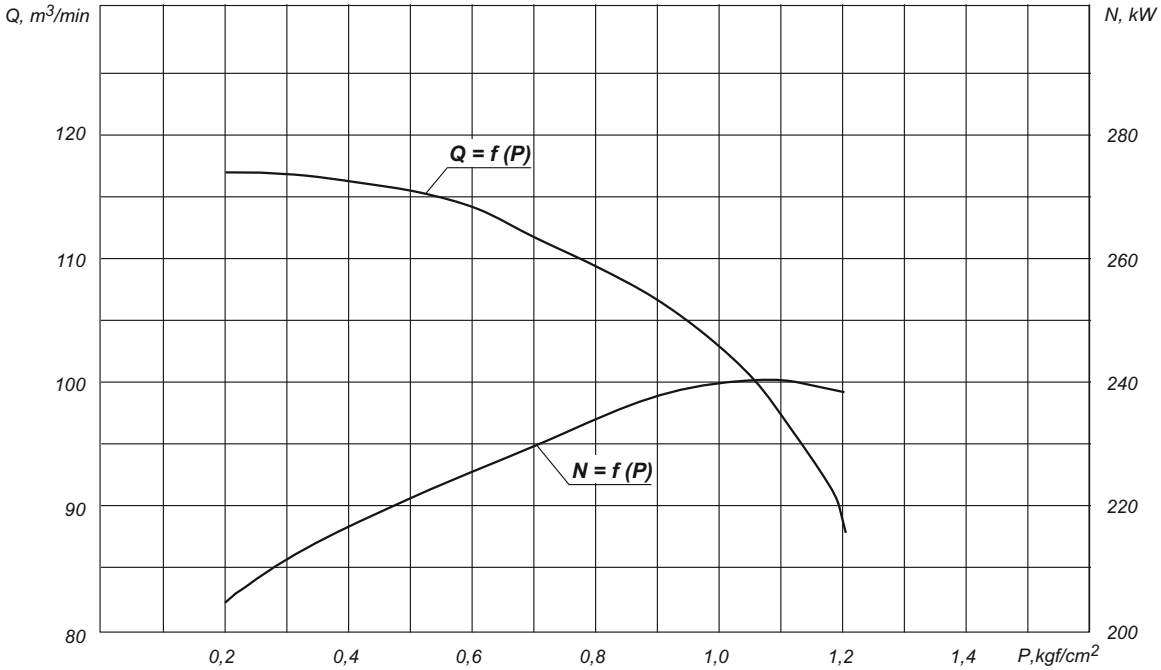

VK-150/1.2N; VK-150/1.2 Liquid Ring Compressor

Dimensional drawing of VK-150/1.2N, VK-150/1.2 compressor

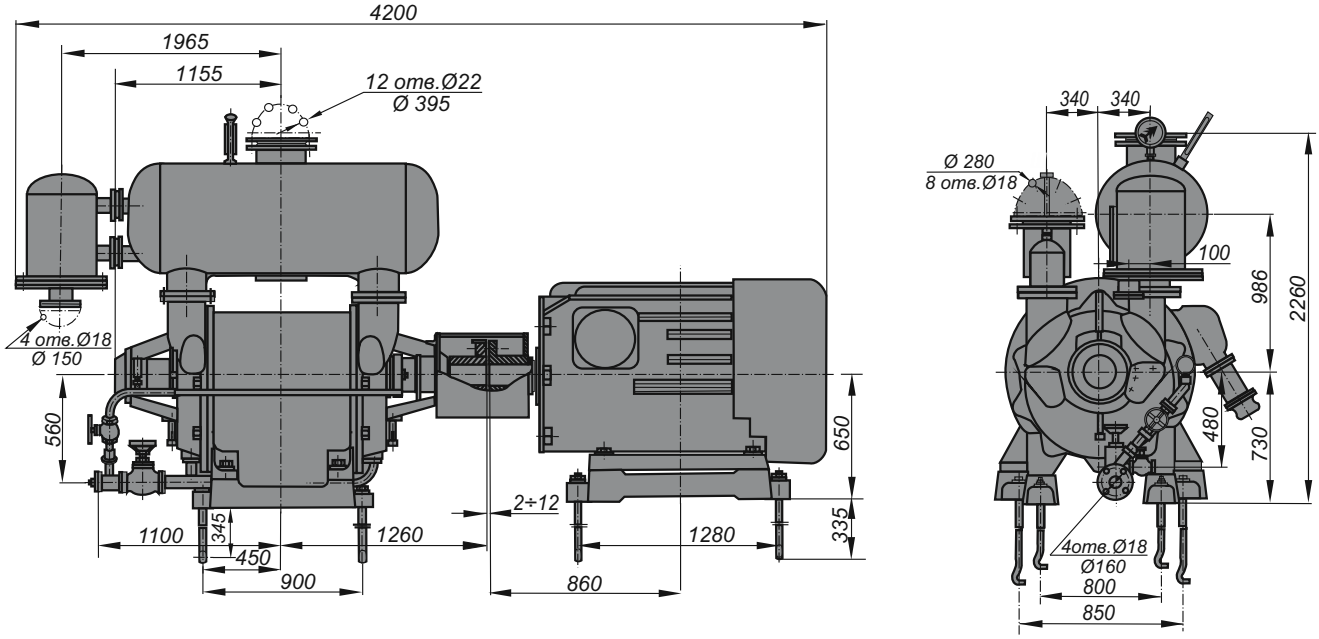

Motor			
Designation	kW	V	rpm
SD2-85/57-10UKhL4	500	6000	600

Performances and curves of VK-150/1.2N, VK-150/1.2 compressor

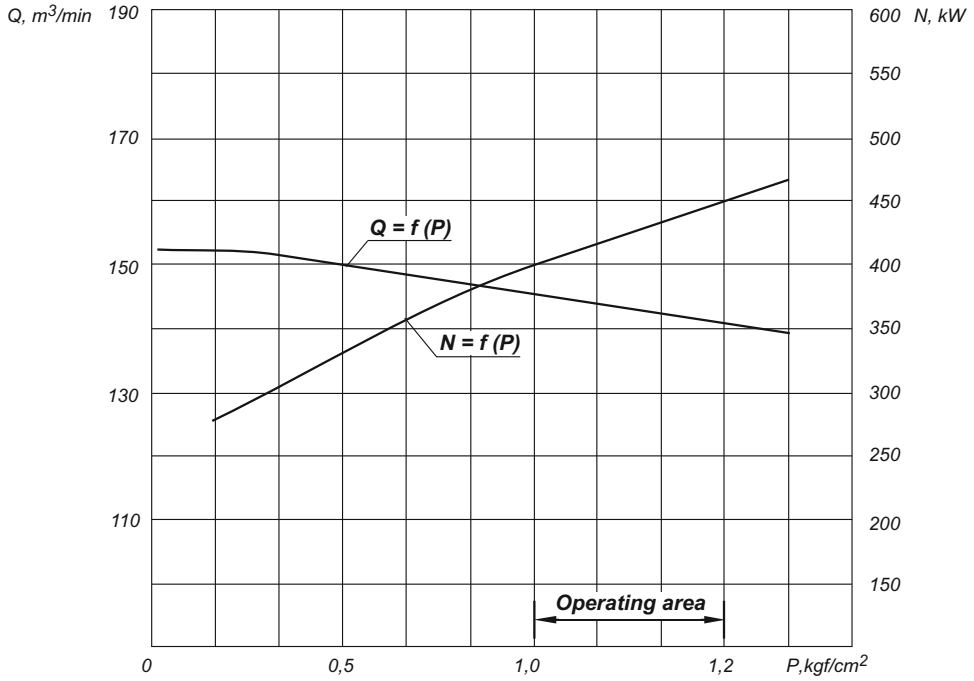

N = 10 s^{-1} (600 rpm); f = 50 Hz

VVK-150 Liquid Ring Vacuum Compressor

Dimensional drawing of VVK-150 liquid ring vacuum compressor

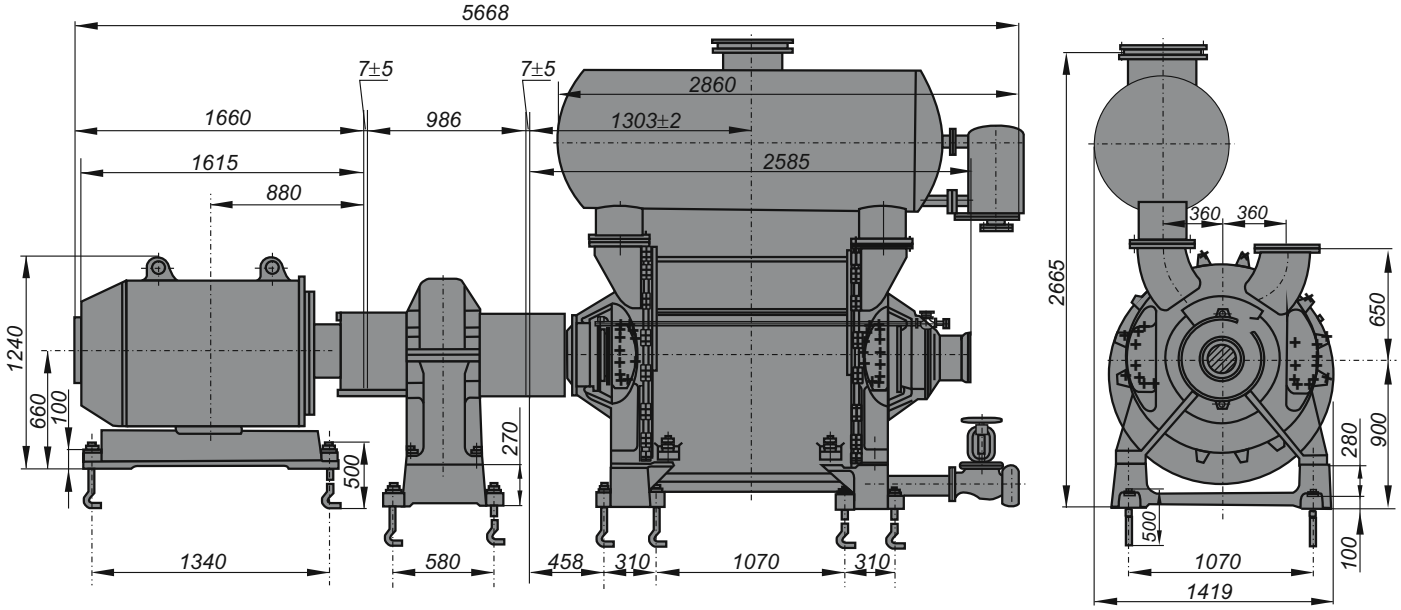

Motor			
Designation	kW	V	об/мин
VAO2-450LA-692	250	6000	985

Performances and curves of VVK-150 vacuum compressor

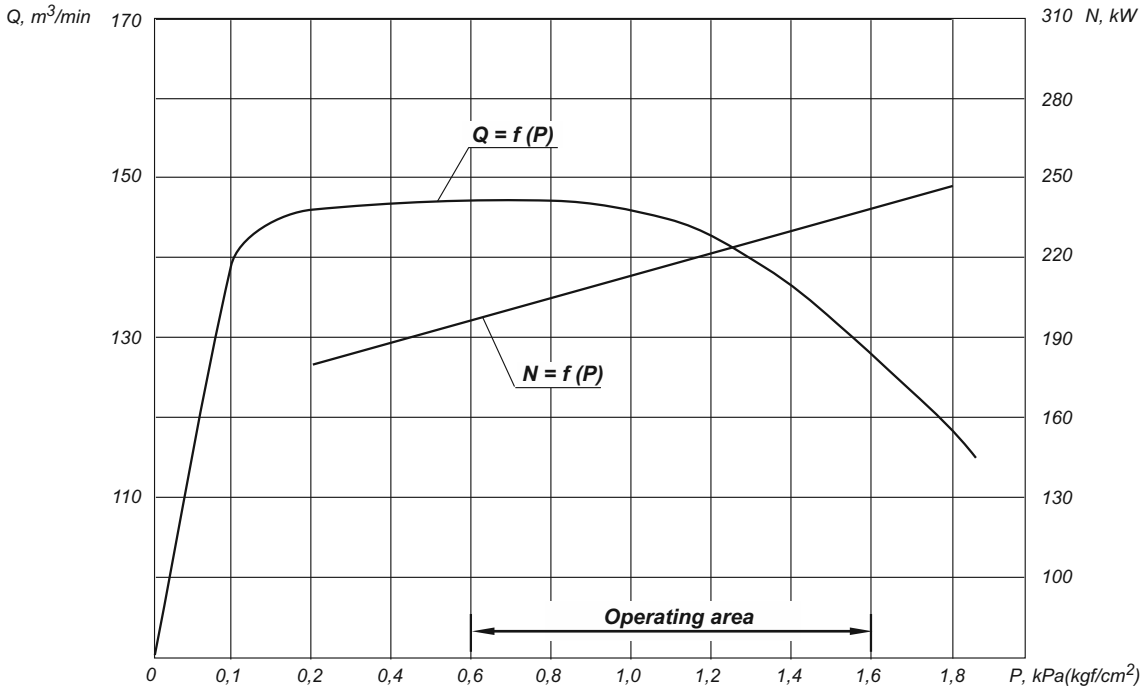

$N = 5\ s^{-1}$ (300 rpm); f = 50 Hz

Data Sheet

Pump designation _____

Application _____

_____

Quantity _____ pcs.

№	Parameter (Performance)	Unit of measurement	Customer's requirements
	FUNCTIONAL		
1.1	Capacity as per initial conditions, at	m^3/min	
1.2	Suction PN	MPa	
1.3	Discharge PN	MPa	
1.4	Supplied water temperature	°C	
1.5	Gas initial temperature	°C	
1.6	Consumed water flow rate	l/min	
1.7	Rotational speed	rpm	
	PUMPED MEDIUM		
2.1	Name		
2.2	Percentage composition (for solutions and mixtures)	%	
2.3	Density	kg/m^3	
2.4	Viscosity	cSt	
2.5	Water solubility (yes/no)		
2.6	Explosion hazard, category and group as per Electrical Installation Code		
2.7	Presence of abrasive particles, their size and quantity		
	SHAFT SEAL		
3.1	Gland single/doubled seal		
3.2	End single/doubled seal		
	OPERATING (INSTALLATION) CONDITIONS		
4.1	Pump installation (indoor, outdoor) and the category as per Electrical Installation Code		
4.2	Climatic version		
4.3	The category of explosion safety and fire area location as per Electrical Installation Code		
	DRIVE		
5.1	Voltage	V	
5.2	Network power frequency	Hz	
5.3	Motor rotational speed	Rpm	
5.4	Power	kW	

Appendix: lay-out, other requirements

Name, address and phone of the Company, requesting the pump _____

_____

Signature (name, title)

Date of Data Sheet filling in "____"_____

Rotary Vane-Type Vacuum Pumps

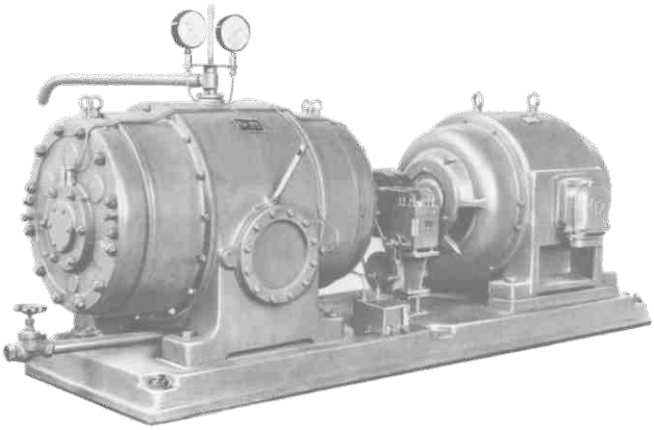

Designed for pumping out of air and non-aggressive gases (creation of vacuum), preliminary purified from condensed moisture and mechanical impurities.

Application: chemical, paper, ore mining and metallurgical industry, agriculture, transport, industrial and public water supply.

Technical Data

Designation	Capacity at suction pressure, m^3/min	Suction pressure limit, kPa	Cooling water consumption, m^3/min	Oil consumption, kg/hour	Rotational speed, rpm	Motor power, kW
RVN-25	25	40-10	0.65	0.25	585	55
RVN-50	50	40-10	1.3	0.3	485	75

The Company improves the pumping equipment and equips pumping units with the motors of different manufactures. Thereby when ordering, please specify overall and mounting dimensions and required parameters according to the recommended form of Data Sheet.

Desig-nation	Motor			
	Designation	kW	V	rpm
RVN-25	AIR-315 S10	55	220/380	600
RVN-50	AIR-355 S12 U3	75	220/380	485

Material of main parts: gray cast iron, carbon steel.

Dimensional drawing of RVN pumps

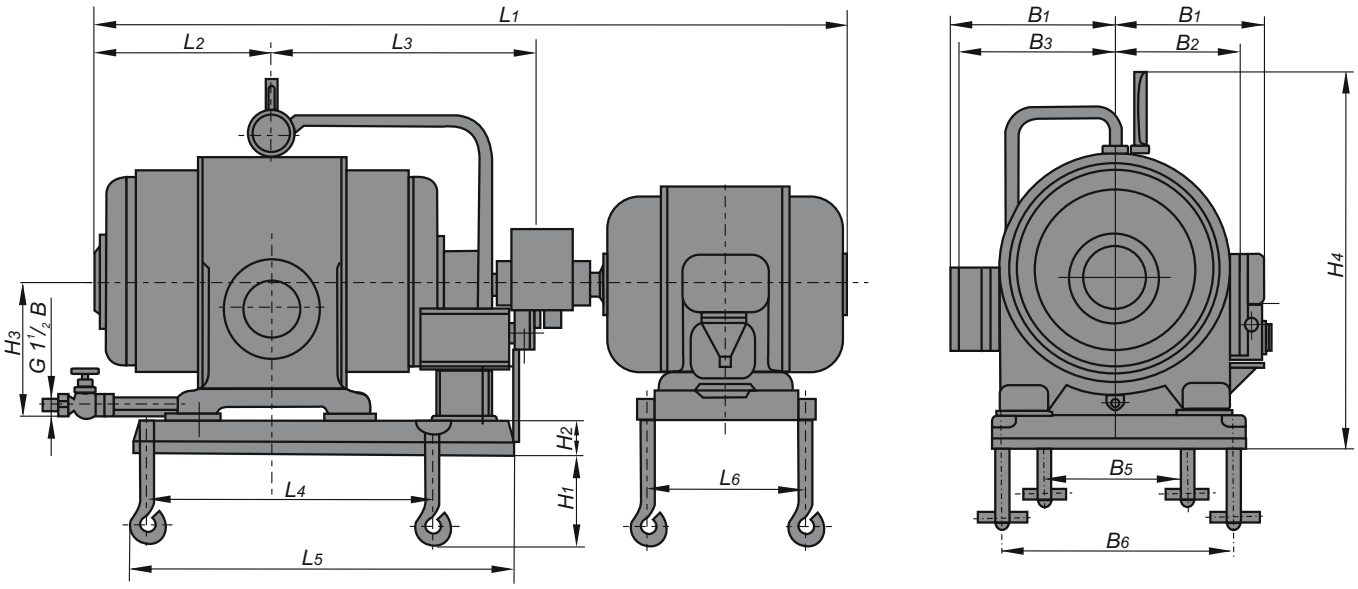

Overall and installation dimensions

Desig-nation	Dimensions, mm															Weight, kg
	L_1	L_2	L_3	L_4	L_5	L_6	B_1	B_2	B_3	B_5	B_6	H_1	H_2	H_3	H_4	
RVN-25	2250	470	765	805	1070	680	500	360	480	508	650	250	145	285	1100	1220
RVN-50	3170	675	1030	1050	1445	840	600	460	580	610	820	250	155	495	1408	2750

Performances and curves of RVN-25 and RVN-25 pumps

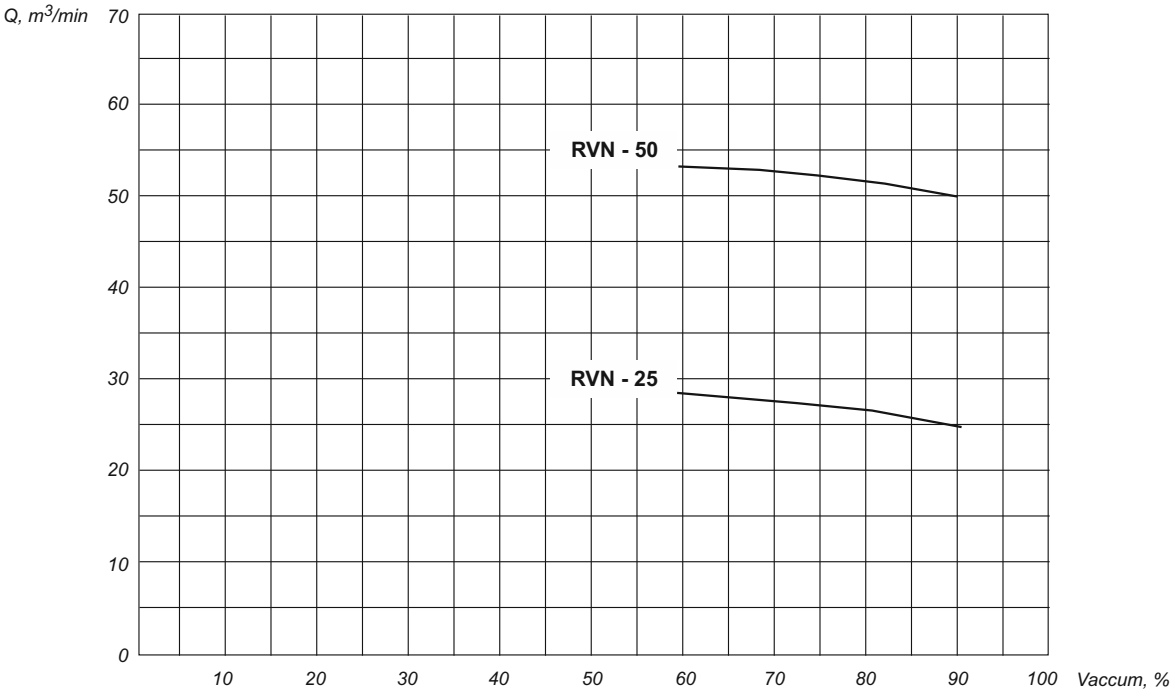

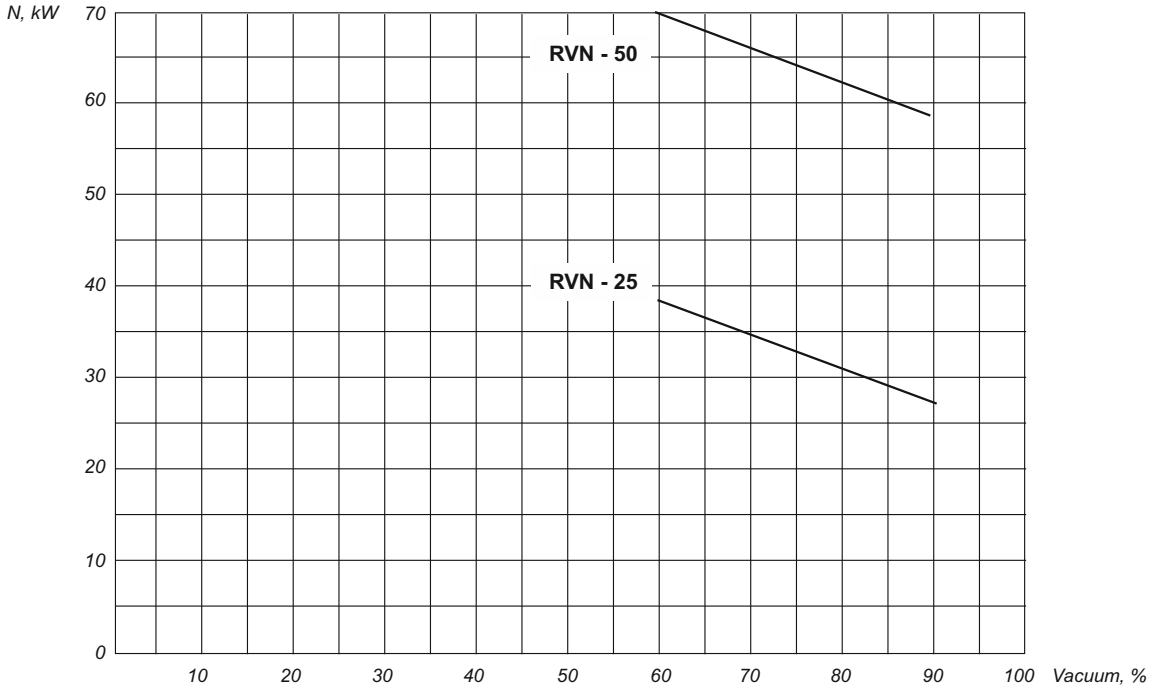

Data Sheet

Pump designation _____

Application _____

_____

Quantity _____ pcs.

№	Parameter (Performance)	Unit of measurement	Customer's requirements
	FUNCTIONAL		
1.1	Capacity as per initial conditions, at	m^3/min	
1.2	Suction PN	MPa	
1.3	Discharge PN	MPa	
1.4	Supplied water temperature	°C	
1.5	Gas initial temperature	°C	
1.6	Consumed water flow rate	l/min	
1.7	Rotational speed	rpm	
	PUMPED MEDIUM		
2.1	Name		
2.2	Percentage composition (for solutions and mixtures)	%	
2.3	Density	kg/m^3	
2.4	Viscosity	cSt	
2.5	Water solubility (yes/no)		
2.6	Explosion hazard, category and group as per Electrical Installation Code		
2.7	Presence of abrasive particles, their size and quantity		
	SHAFT SEAL		
3.1	Gland single/doubled seal		
3.2	End single/doubled seal		
OPERATING (INSTALLATION) CONDITIONS			
4.1	Pump installation (indoor, outdoor) and the category as per Electrical Installation Code		
4.2	Climatic version		
4.3	The category of explosion safety and fire area location as per Electrical Installation Code		
	DRIVE		
5.1	Voltage	V	
5.2	Network power frequency	Hz	
5.3	Motor rotational speed	Rpm	
5.4	Power	kW	

Appendix: lay-out, other requirements

Name, address and phone of the Company, requesting the pump _____

_____

Signature (name, title)

Date of Data Sheet filling in "____"_____

Certificates and Approvals

Certificates of compliance:

- Certificate of quality management system compliance with ISO 9001:2015 standard;
- Certificate of compliance of industrial health and safety management system with OHSAS 18001:2007 standard;
- Certificate of compliance of environmental protection management system with ISO 14001:2015 standard.
- API conformity certificates:
    - Centrifugal pumps for petroleum and petrochemical industry.